MONITOR 2 UNIT

TYPES 2007 / 00 - / 03 ; 2009 / 00 - / 03

SCHEMATIC

SERVICENOTES

TYPES 5751 / 008 / 01

by : Freddy Albrektsen 2009

Service Manual – issue #2

This service manual is for the maintenance of Danfield Equipment. The performance figures quoted are typical and are subject to normal manufacturing and service tolerances.

The right is reserved to alter the equipment described in this manual in the light of future technical development.

DANFIELD AUDIO LIMITED Copenhagen . Denmark

CONTENTS

	Page
Description	3
D-Sub Connections	4
DIP settings	5
Talkback Modification	6
AutoCue	7
Blank	8
Talkback Amps Int/Ext	9
VCA circuit	10
CUE-1 Audio & Switching	11
CUE-2 Audio & Switching	12
Mono/Diff Circuitry	13
Input Amps & Summing Amps	14
Output Amps	15
Logic Main Card & Reset	16
Meter Select	17
Power Transformer Torroidal version	18
Power Switchmode Stack principle	19
Power Supply versions	20
Power Supply PCB	21
Input Card (Lower) Edge Connectors	22
Output Card (Upper) Edge Connectors	23
Remote Unit Internal wiring	24
Remote cable color numbering	25
Remote 50way connector internal PCB	26
Analogue Input Card Component & PCB tracks	27
Logic Card Componet layout	28
Talkback Amp PCB & DIP switch PCB	29

Appendix

“Cut fix” PCB & CUT relay PCB	30
Ext Mix service note	31
Input Card Main modification & Output drivers modification	32
CUT relay diagram & VCA modification	33
Frontplate Mechanical drawing	34
Rearplate Mechanical drawing	35

Description

The Danfield Monitor 2 is a high quality analogue audio controller system, intended for professional use, such as Music Studios – ADR Rooms – Broadcast etc.

It is based around a 1U Rack mainframe with all nessesary analogue I/O's and a small remotecontrol with a 15 feet fixed cable.

The circuits are Solid state IC, using standard IC types on high Quality sockets for convenient servicing.
All switching is done by discrete dual N/P type FETs except the “CUT L-R” which are with two relays.
The actual volume control are done by very precise VCA circuits, meaning that the Remote Volume Potentiometer is a one-layer mono type, controlling both channel VCA's simultaneous with very narrow tracking at all level settings.

The logic control is done by discrete CMOS technique, and does NOT include any CPU.
This means that startup are instant and no shutdown procedure has to be executed.

In general all analogue I/Os – Remote can be disconnected with full power on the system without any hazard.

All Analogue I/Os are fully floating balanced to maintain unity gain structure in all installation types.
Therefore, care has to be taken, when connecting Unbalanced equipment to the Controller unit.

The build in power supply is featuring two different types.
Type 1 (Older versions) is a standard Linear type with toroidal transformer and voltage regulators on heatsinks providing 4 voltage rails.
Type 2 (Never versions) have 2 pcs Switchmode modules replacing the transformer/Main Capacitors/Bridgerectifier, providing a cooler working temperature.

- Pinouts similar to DigiDesigns Dsub
- Use 8 pair Analogue Multicable for each Dsub

4 pcs 25 pole Dsub **Female** seen from rear panel of Danfield unit

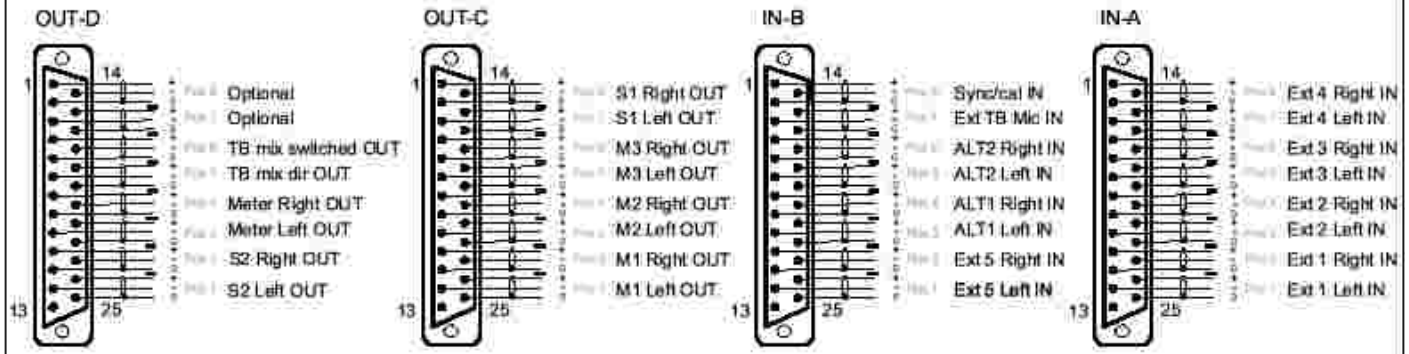

Item: Danfield Standard Dsub IO connection	
Design by: Freddy A	Rev #:
Date: 2008	Danfield Audio Aps

DIP switche seen from rear panel



1 Bootup Speaker M1

2 Bootup Speaker M2

3 Bootup Speaker M3

4 Enable External Talkback Mic

5 Enable Internal Talkback Mic

6 Not used

7 Not used

8 Not used

Item : Monitor Controller Dip switches	
Design by : Freddy A	Rev # :
Date : Sept.2010	Danfield Audio Aps

Analogue output upper card

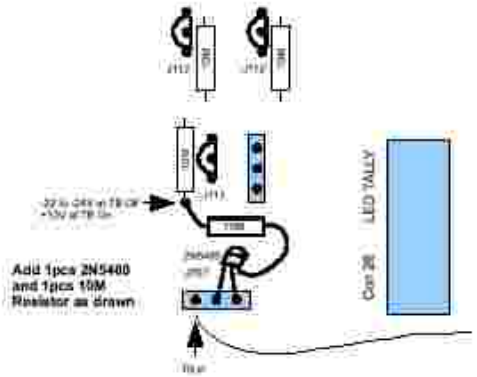

Modification to solve
TB breakthrough issue
in off status

Item : Monitor Controller v1 TB mod #1	
Design by : Freddy A	Rev # : 20190801
Date : 2019	Danfield Audio Aps

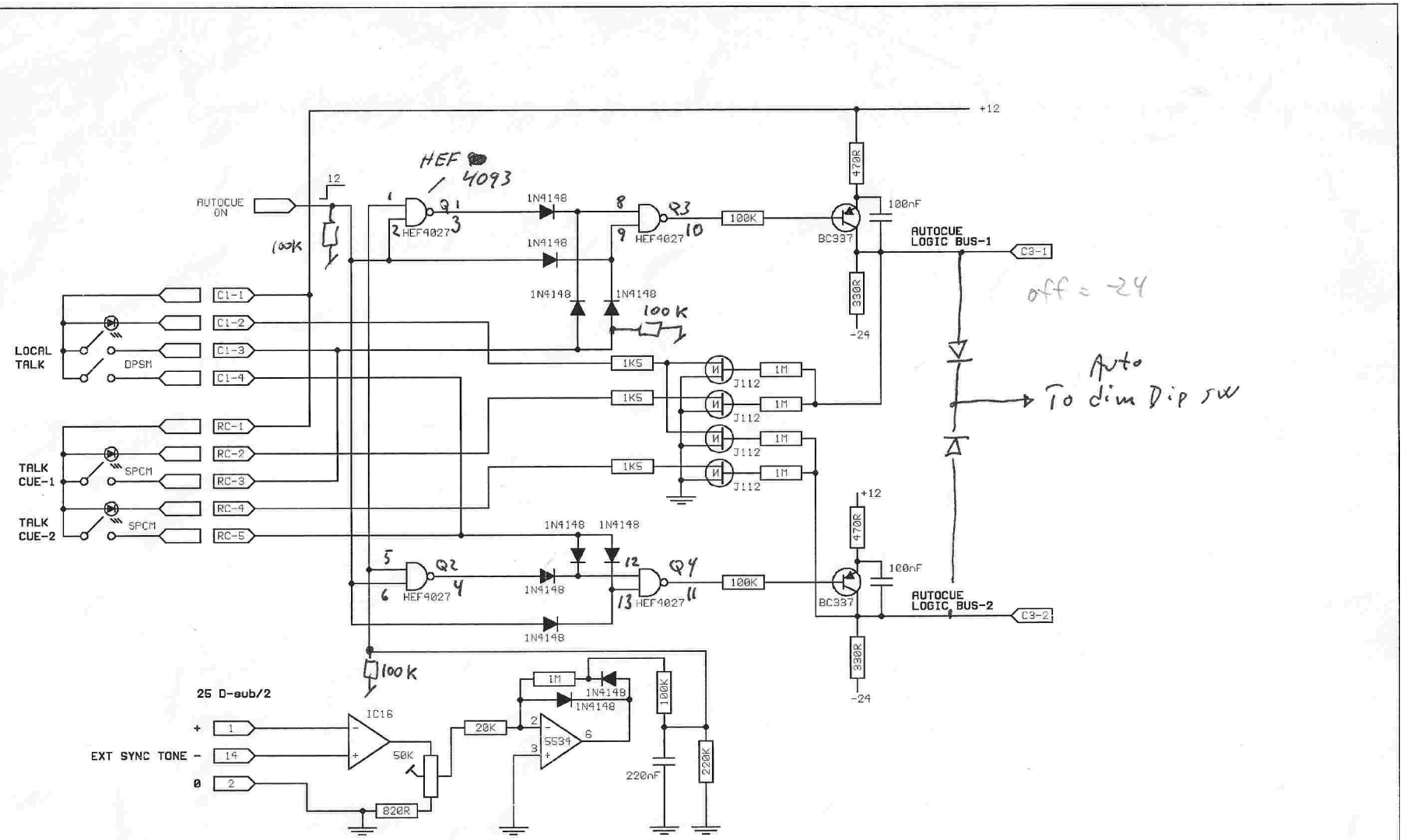

Subject : Danfield MC2 AUTOCUE CIRC.		
Revision : #3	Design by : Freddy Albrektsen	Sheet : of
Date : 1 Jan 2009	File : MC2-1.SCH	Status

Blank page

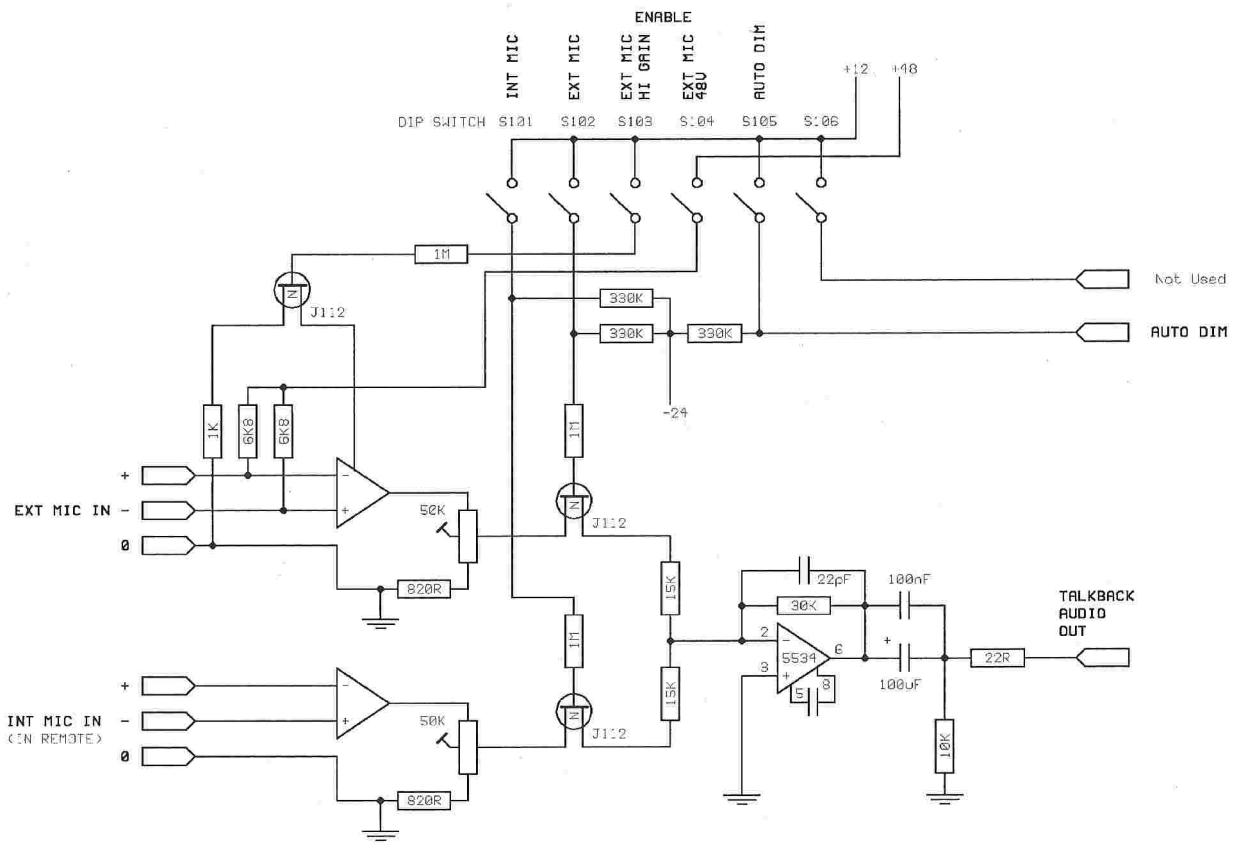

1/1-2009 Fredy Albrektsen

Subject : DANFIELD MC2 INT/EXT TALKBACK CIRC		
Revision : #2	Design by : FREDDY ALBREKTSEN	Sheet : of
Date : 1 JAN 2009	File : MC2-2.SCH	Status

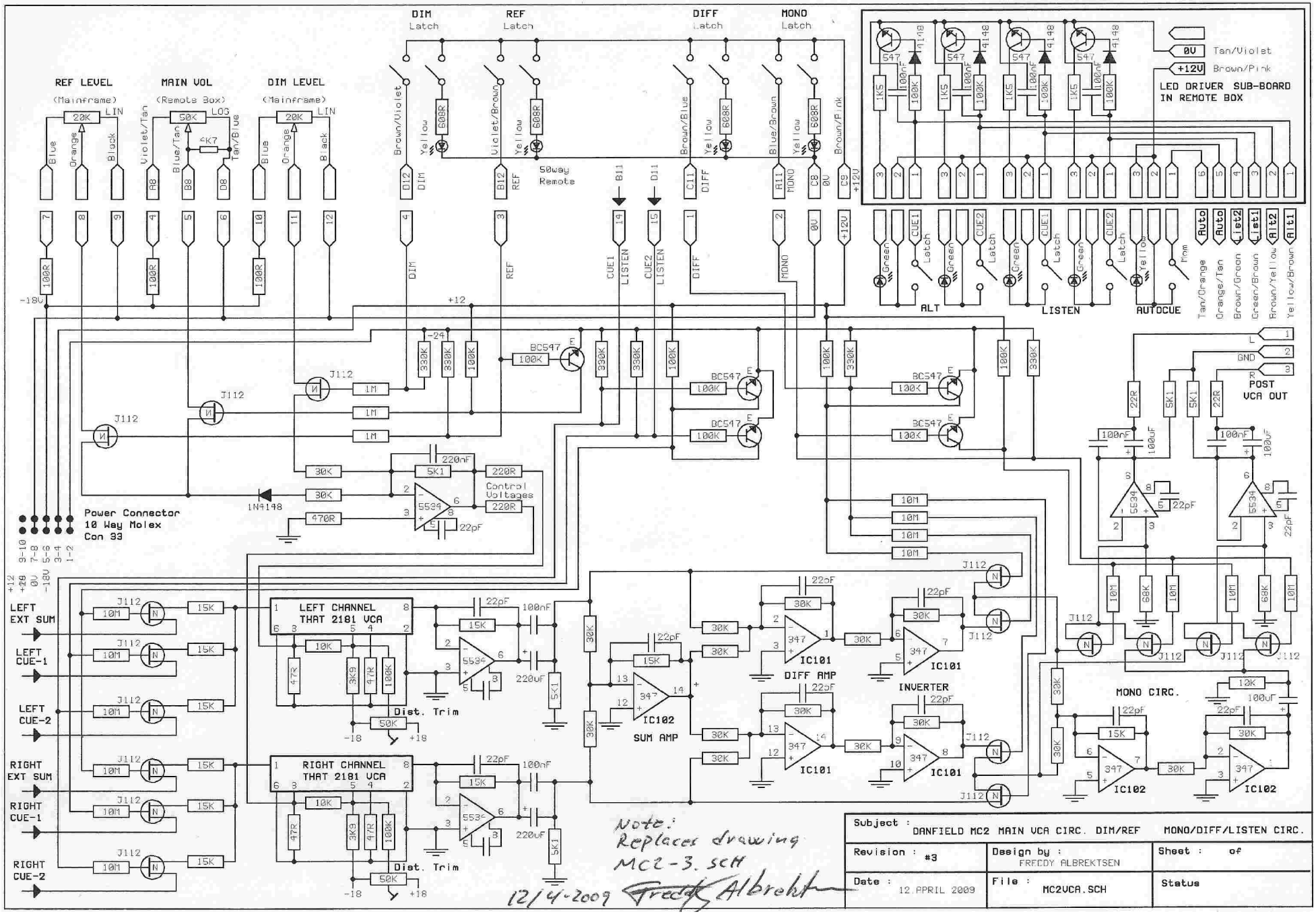
DIM Latch
REF Latch
DIFF Latch
MONO Latch
REF LEVEL
(Mainframe)
MAIN VOL
(Remote Box)
DIM LEVEL
(Mainframe)
50way Remote
LED DRIVER SUB-BOARD IN REMOTE BOX
0V Tan/Violet
+12V Brown/Pink
ALT
LISTEN
AUTOCUE
Power Connector 10 Way Molex Con 33
Control Voltages
LEFT CHANNEL THAT 2181 VCA
RIGHT CHANNEL THAT 2181 VCA
Dist. Trim
IC101 DIFF AMP
IC101 INVERTER
IC102 SUM AMP
MONO CIRC.
POST VCA OUT
LEFT EXT SUM
LEFT CUE-1
LEFT CUE-2
RIGHT EXT SUM
RIGHT CUE-1
RIGHT CUE-2
Note: Replaces drawing MC2-3.SCH
12/4-2009 Freddy Albrektsen
Subject : DANFIELD MC2 MAIN VCA CIRC. DIM/REF MONO/DIFF/LISTEN CIRC.
Revision : #3
Design by : FREDDY ALBREKTSEN
Sheet : of
Date : 12 APRIL 2009
File : MC2VCA.SCH
Status

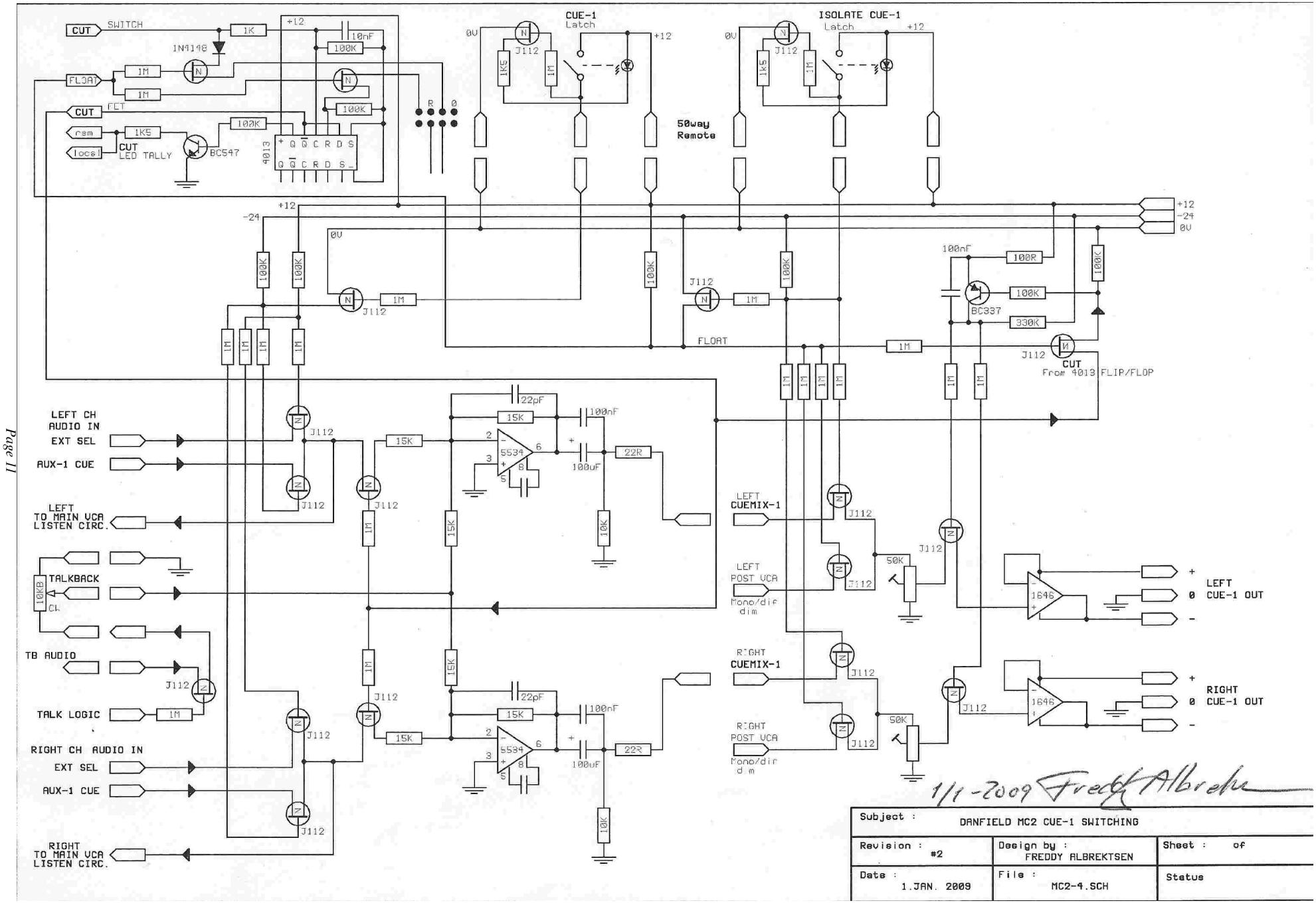

Subject : DANFIELD MC2 CUE-1 SWITCHING		
Revision : #2	Design by : FREDDY ALBREKTSEN	Sheet : of
Date : 1.JAN. 2009	File : MC2-4.SCH	Status

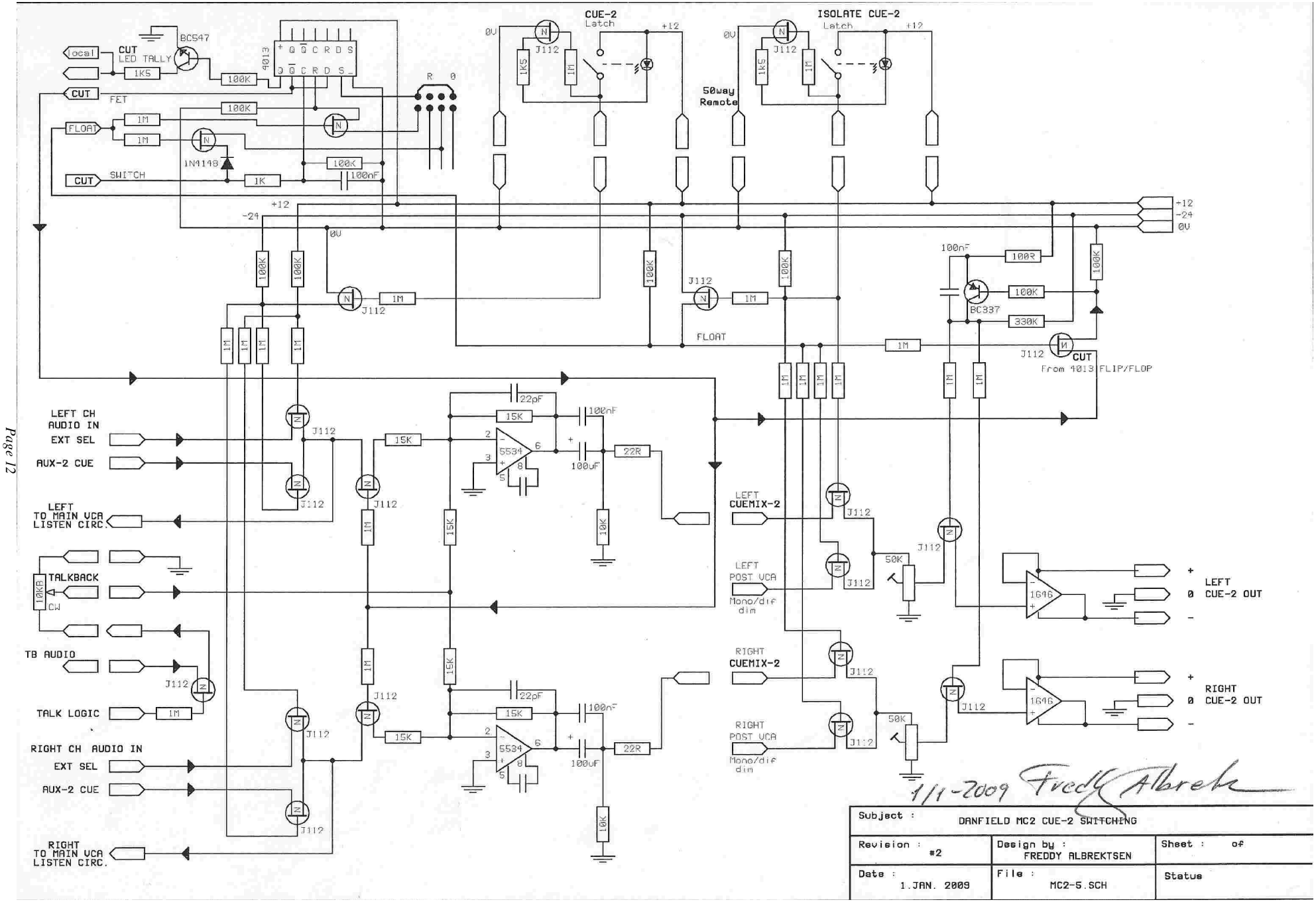

CUE-2
Latch
ISOLATE CUE-2
Latch
50way
Remote
local
CUT
LED TALLY
BC547
4013
CUT
FET
FLOAT
CUT
SWITCH
1N4148
+12
-24
0V
J112
FLOAT
BC337
CUT
From 4013 FLIP/FLOP
LEFT CH
AUDIO IN
EXT SEL
AUX-2 CUE
LEFT
TO MAIN VCA
LISTEN CIRC.
TALKBACK
CW
TB AUDIO
TALK LOGIC
RIGHT CH AUDIO IN
EXT SEL
AUX-2 CUE
RIGHT
TO MAIN VCA
LISTEN CIRC.
5534
LEFT
CUEMIX-2
LEFT
POST VCA
Mono/dif
dim
RIGHT
CUEMIX-2
RIGHT
POST VCA
Mono/dif
dim
LEFT
CUE-2 OUT
RIGHT
CUE-2 OUT
1/1-2009 Fredy Albrek
Subject : DANFIELD MC2 CUE-2 SWITCHING
Revision : #2
Design by : FREDDY ALBREKTSEN
Sheet : of
Date : 1.JAN. 2009
File : MC2-5.SCH
Status

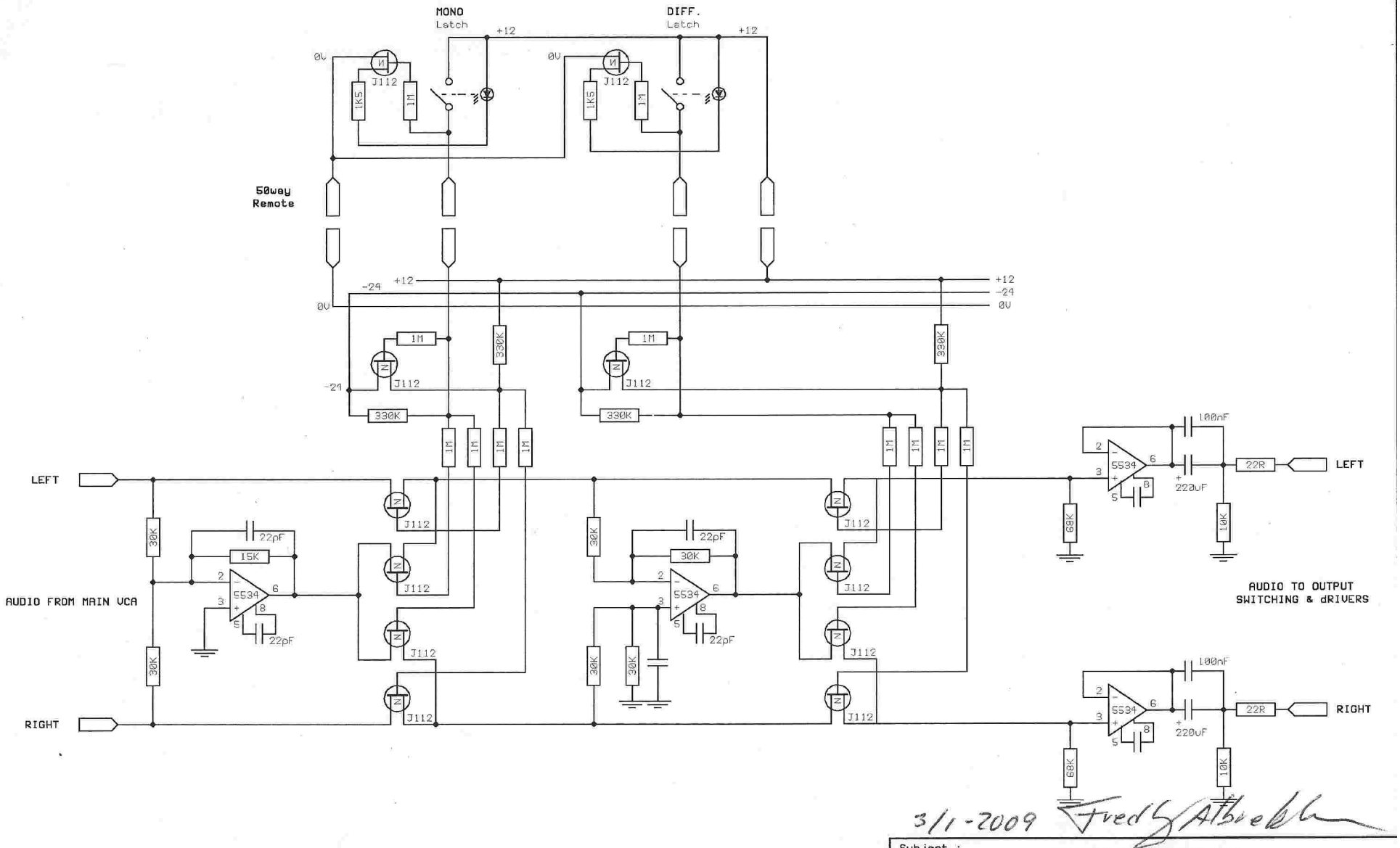

3/1-2009 Freddy Albrektsen

Subject : DANFIELD MC2 MONO-DIFF-CIRC.		
Revision : #2	Design by : FREDDY ALBREKTSEN	Sheet : of
Date : 3.JAN. 2009	File : MC2-7.SCH	Status

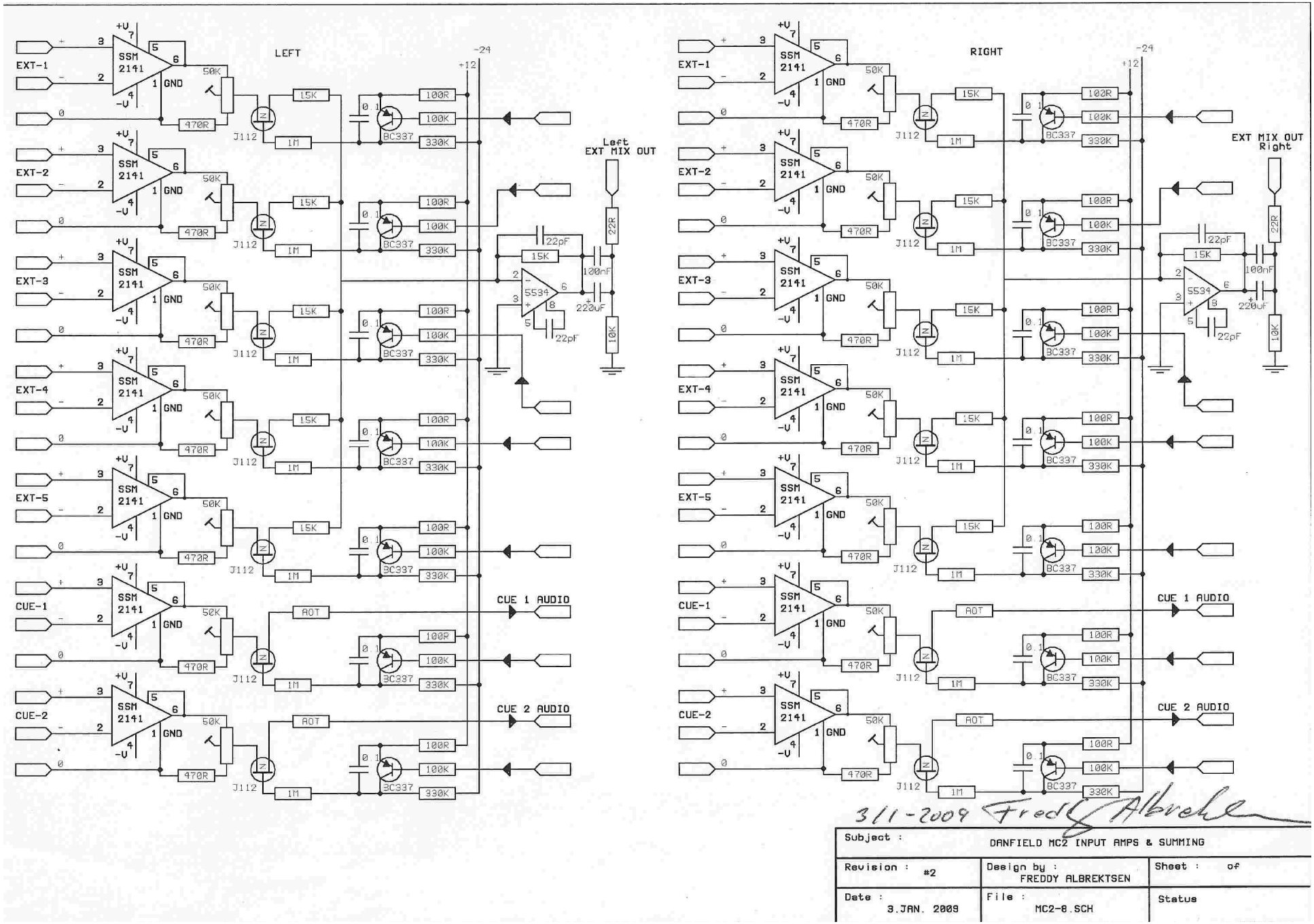
LEFT
RIGHT
EXT-1
EXT-2
EXT-3
EXT-4
EXT-5
CUE-1
CUE-2
SSM 2141
GND
+U
-U
50K
470R
J112
15K
1M
BC337
100R
100K
330K
AOT
CUE 1 AUDIO
CUE 2 AUDIO
+12
-24
5534
22pF
100nF
220uF
10K
22R
Left EXT MIX OUT
EXT MIX OUT Right
3/1-2009 Fredy Albrekt
Subject : DANFIELD MC2 INPUT AMPS & SUMMING
Revision : #2
Design by : FREDDY ALBREKTSEN
Sheet : of
Date : 3.JAN. 2009
File : MC2-8.SCH
Status

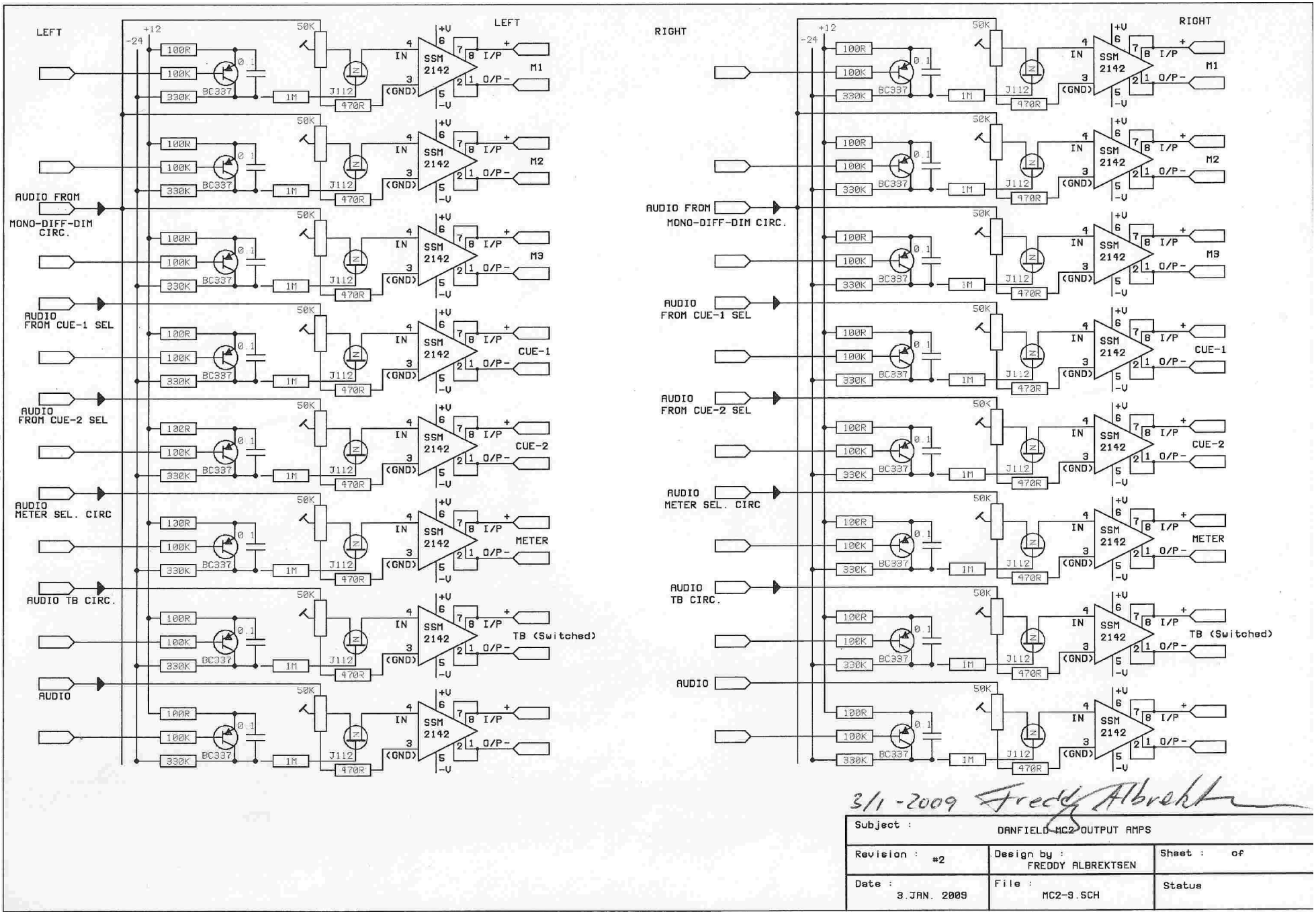

3/1-2009 Freddy Albrekt

Subject : DANFIELD MC2 OUTPUT AMPS		
Revision : #2	Design by : FREDDY ALBREKTSEN	Sheet : of
Date : 3.JAN. 2009	File : MC2-S.SCH	Status

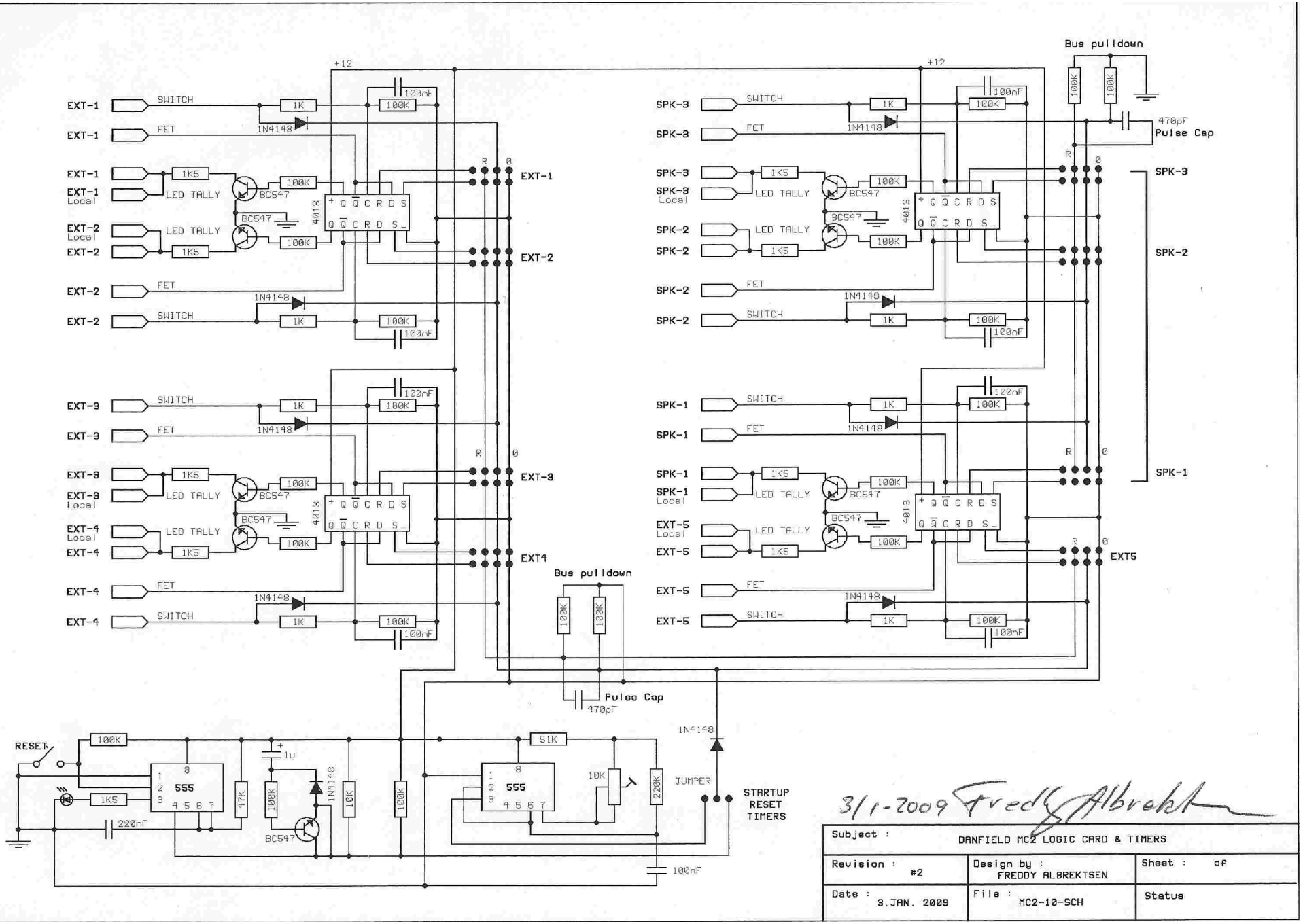
EXT-1
SWITCH
FET
LED TALLY
Local
EXT-2
EXT-3
EXT-4
EXT-5
SPK-1
SPK-2
SPK-3
+12
1K
1K5
100K
100nF
1N4148
BC547
4013
Bus pulldown
470pF
Pulse Cap
RESET
555
220nF
47K
10K
51K
1u
JUMPER
STARTUP
RESET
TIMERS
3/1-2009 Fredd Albrekt
Subject : DANFIELD MC2 LOGIC CARD & TIMERS
Revision : #2
Design by : FREDDY ALBREKTSEN
Sheet : of
Date : 3.JAN. 2009
File : MC2-10-SCH
Status

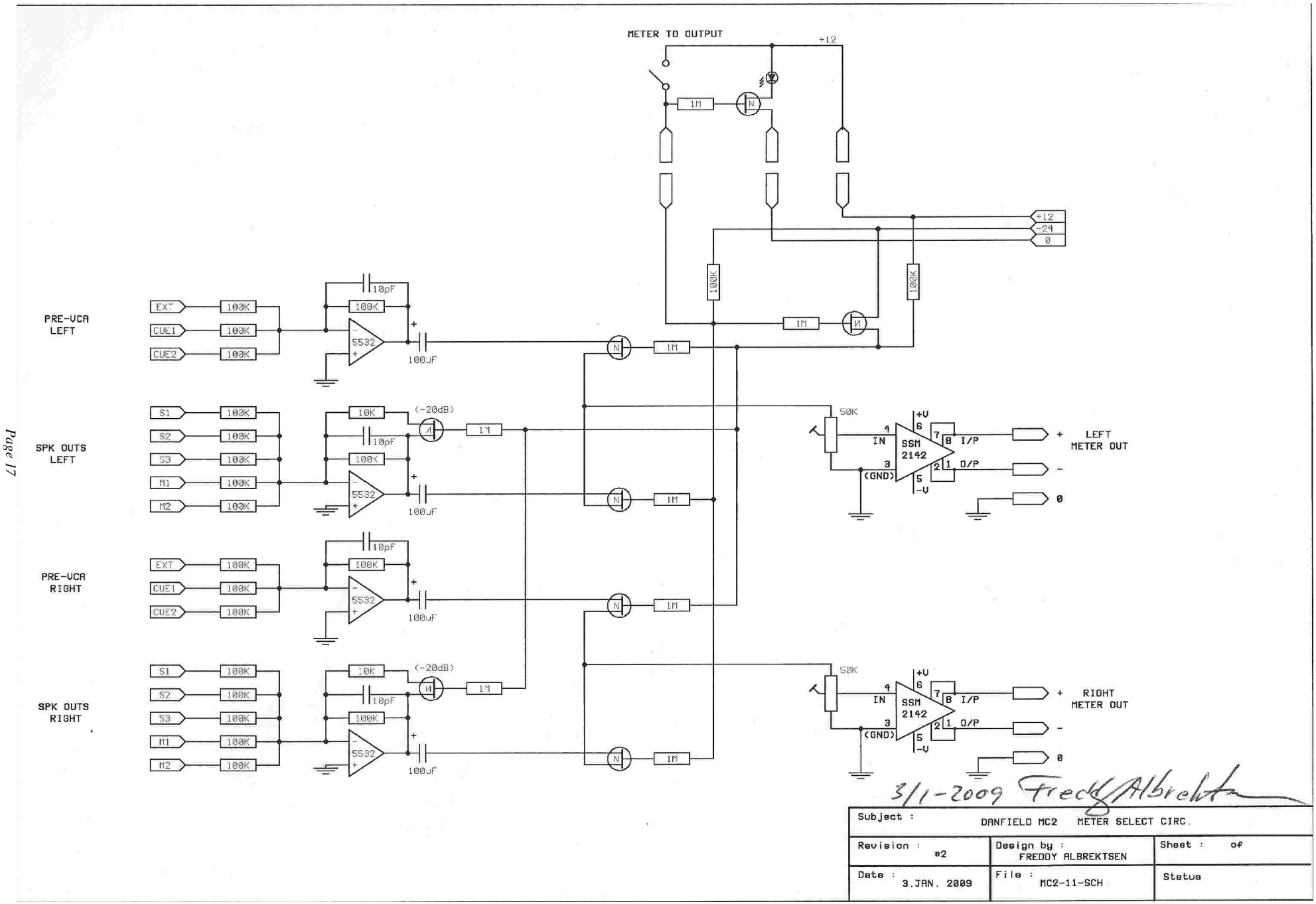
METER TO OUTPUT
+12
1M
100K
+12
-24
0
PRE-VCA LEFT
EXT
CUE1
CUE2
100K
10pF
5532
100µF
SPK OUTS LEFT
S1
S2
S3
M1
M2
10K
(-20dB)
1M
50K
SSM 2142
IN
(GND)
+V
-V
I/P
O/P
+ LEFT METER OUT
-
0
PRE-VCA RIGHT
SPK OUTS RIGHT
+ RIGHT METER OUT
3/1-2009 Fredd Albrekta
Subject : DANFIELD MC2 METER SELECT CIRC.
Revision : #2
Design by : FREDDY ALBREKTSEN
Sheet : of
Date : 3.JAN. 2009
File : MC2-11-SCH
Status

Transformer connections

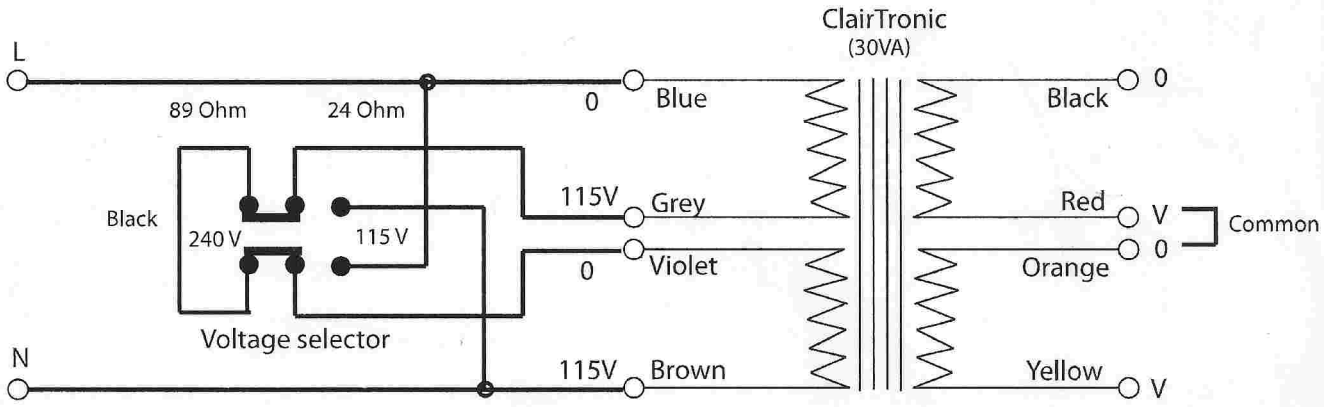

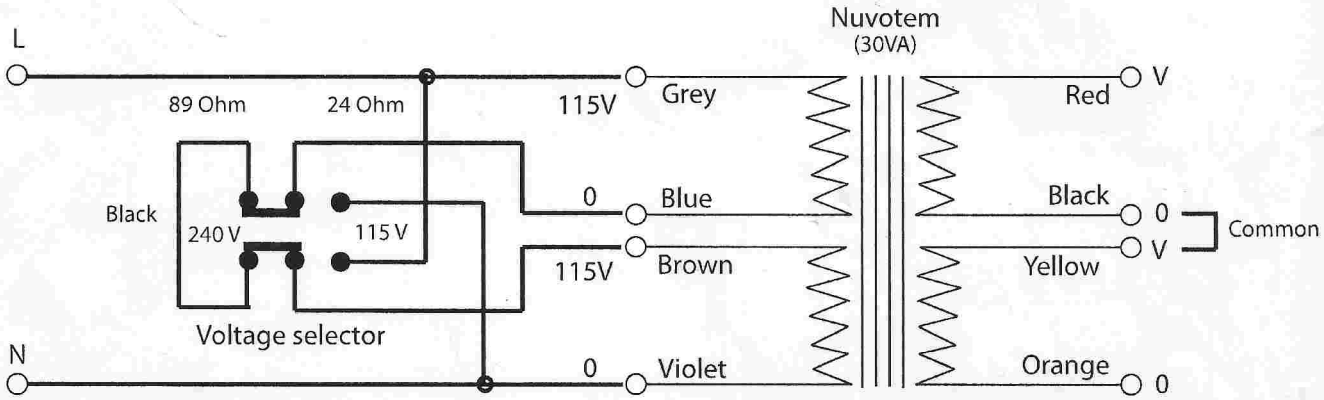

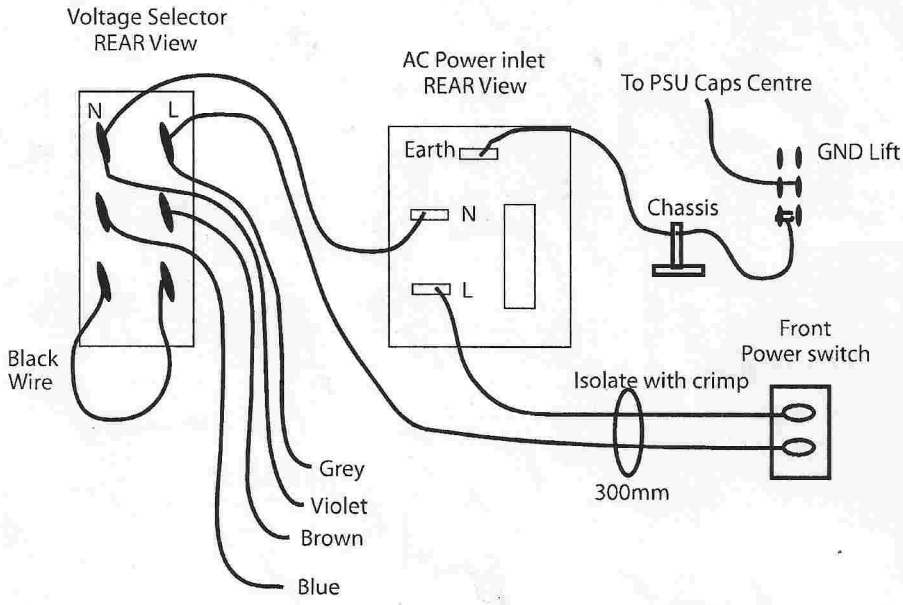

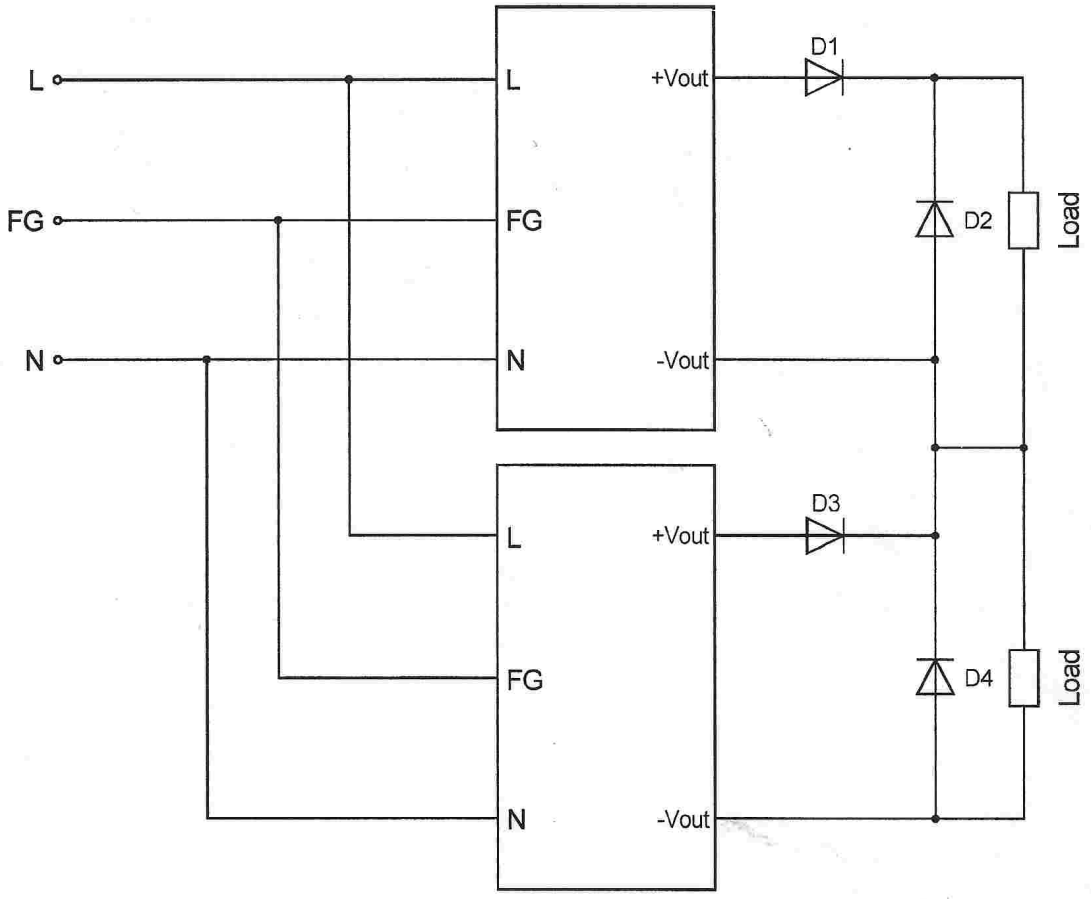

SPECIFICATIONS	CONTRACT NO.	DATE	TRACO ELECTRONIC AG Jenatschstr. 1, 8002 Zürich, Tel: +41 43 345 4511, FAX: +41 43 345 4545 E-Mail: techsupport@traco.ch Webpage: http://www.tracopower.com			
	DRAWN BY: Peder Arpagaus	08.09.04				
	CHECKED BY: Markus Dalla Monta	23.02.09	Recommended circuit for serial connection of two power supply to get a ± output voltage			
	DESIGNED BY: Peder Arpagaus	08.09.04				
	DESIGN ACTIVITY Peder Arpagaus	23.02.09	SIZE A4	DWG NO. 420/990-3704-01010	FILE NAME Two_Power_Supplies_in_Series_to_get_+-_Output.SKF	
	CUSTOMER		SCALE	DATE September 08, 2004	ISSUE: 01	

MC 2 Power

8/5-09
Freddy

Total AC power req:

2 x 24V AC or DC

2 x 400mA (Build for 1000mA)

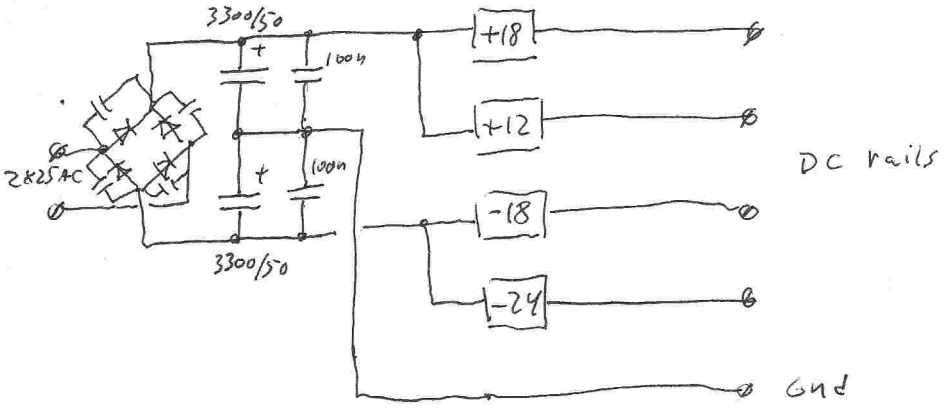

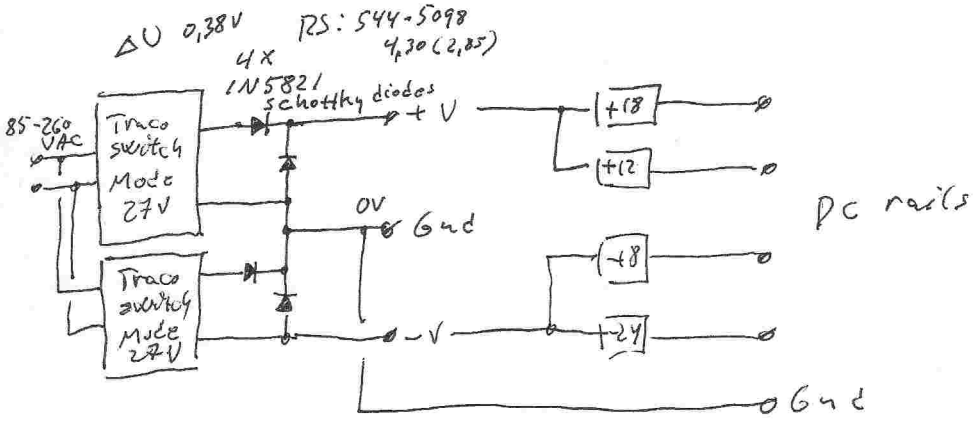

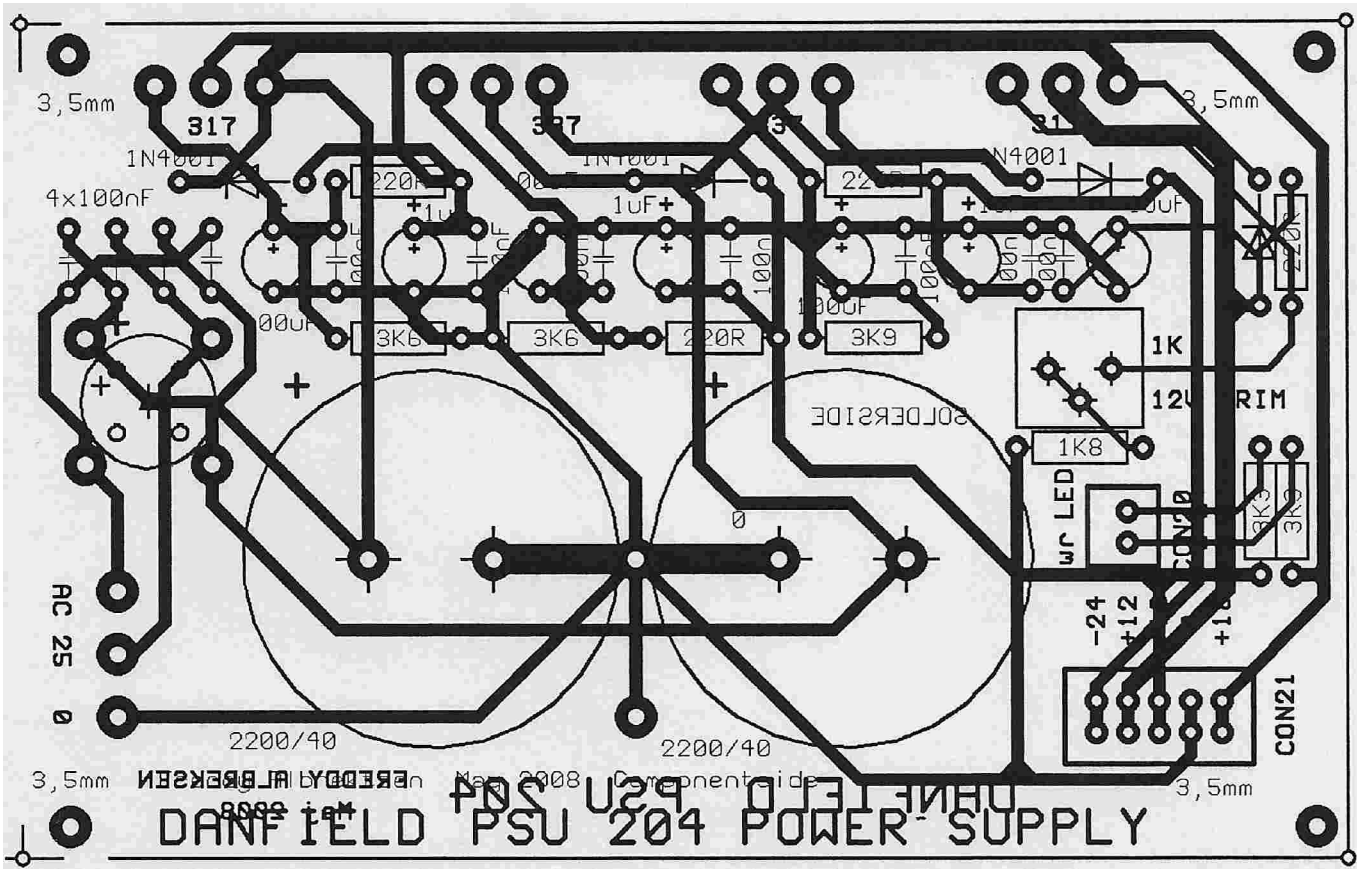

Power Supply Layer 0 & 1 & 2

Danfield Monitor 2 Input Card Connections

EXT TB send	Interconn card	Violet
Phantom power IN	Interconn card	Orange
SYNC send	Output card Aux	Green
DIFF switch	C11	Violet
MONO switch	A11	Violet
REF switch	B12	Violet
DIM switch	D12	Violet
VCA send - Right	To Relay Card IN- R	Red
GND	To Relay Card IN Gnd	Black
VCA send - Left	To Relay Card IN- L	Blue
Volume Pot - volt	A8 - Bottom	Orange
Volume Pot Wiper	B8 -	Violet
Volume Pot Ground	D8 - Top	White
REF Pot - volt	Mainframe - Bottom	Orange
REF Pot Wiper	Mainframe -	Violet
REF Pot Ground	Mainframe - Top	White
DIM Pot - volt	Mainframe - Bottom	Orange
DIM Pot Wiper	Mainframe -	Violet
DIM Pot Ground	Mainframe - Top	White
CUT voltage IN	Logic Driver Card	Orange
Listen CUE Switch 2 *	D11	White
Listen CUE Switch 1	B11	White
Power connector	Power supply	10 IDC
SUM Amp dir out - R	To Output Card -Ext sum IN - L	Blue
GND	Output Card	Black
SUM Amp dir out - L	To Output Card - Ext sum IN - R	Red
Logic Control IN	Logic Card	10 IDC
ALT 2 - L send	Output Card ALT 2 IN - L	Blue
Ground	Output Card	Black
ALT 2 - R send	Output Card ALT 2 IN - R	Red
ALT 1 - send R	Output Card ALT 1 IN - L	Blue
Ground *	Output Card	Black
ALT 1 - send L	Output Card ALT 1 IN - R	Red
Pre VCA send to meter - L	Output Card IN-SEL Mtr	Blue
Ground	Not used	
Pre VCA send to meter - R	Output Card IN - SEL Mtr	Red
LED Tally Return	Logic Card	10 IDC

Danfield Monitor 2 Output Card Connections

AutoCue Logic IN	Logic card pin 5	Orange
Sync Tone IN	Input card	Orange
Not used		
Float 1 send logic	Logic Card 3 pole conn	Orange
Float 2 send logic	Logic Card 3 pole conn	Orange
ALT 2 switch	C10	White
ALT 1 switch	A10	White
Isolate 1 LED tally	Mainframe switch LED	Violet
Isolate 2 switch	Mainframe switch	White
Isolate 2 LED tally	Mainframe switch LED	Violet
Isolate 1 switch	Mainframe switch	White
+ 12 Volt send	Mainframe Front	Red

TB1 TB2 +12

Pst VCA IN - L	From Relay Card - R	Red
Ground	From Relay Card	Black
Pst VCA IN - R	From Relay Card - L	Blue

Power connector	Power supply	10 IDC

SUM Amp IN - R	From Inputput Card -Ext sum send - L	Blue
GND	Input Card	Black
SUM Amp IN - L	From Inputput Card -Ext sum send - R	Red

Logic Control IN	Logic Card	10 IDC

ALT 2 - L IN	Input Card ALT 2 send - L	Blue
ALT 2 - R IN	Input Card	Black
ALT 1 - L IN	Input Card ALT 2 send - R	Red
ALT 1 - R IN	Input Card ALT 1 send - L	Blue
TB Buss 1-2 sum out to LED	Input Card	Black
Sync signal out to LED	Input Card ALT 1 send - R	Red
Pre VCA send to meter - L	Input Card IN-SEL send to Mtr	Blue
Pre VCA send to meter - R	Input Card IN - SEL send to Mtr	Red

LED Tally Return	Logic Card	10 IDC

TB bus 2 1

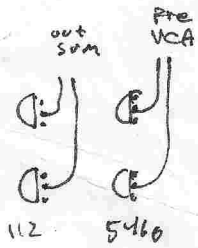

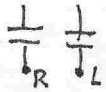

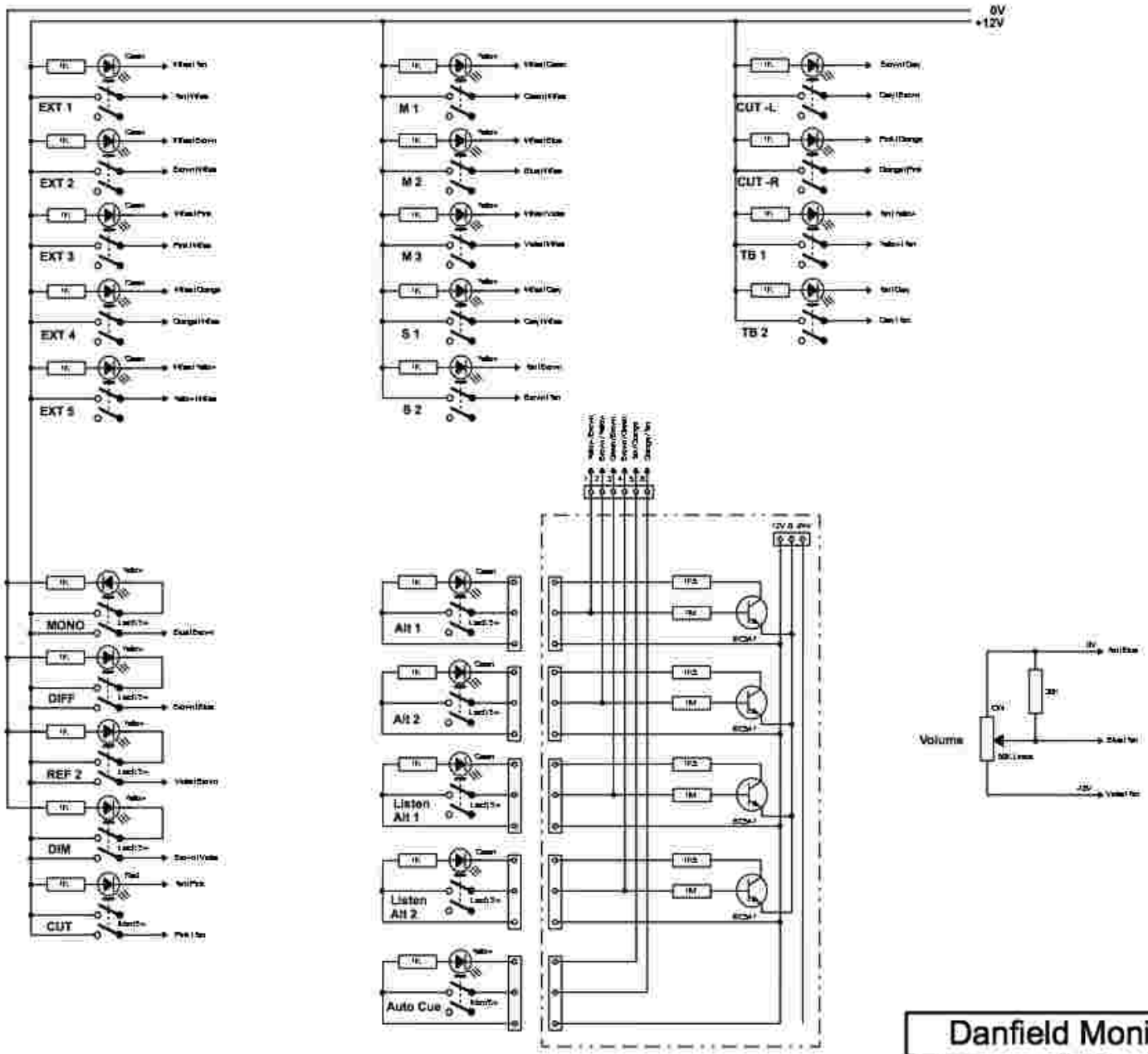

Danfield Monitor Controller Mc2 Remote

Design : Freddy Albrektsen	3. January 2009	

Danfield Monitor 2

Remote connections Freddy Albrektsen 21.Aug 2009

50 way Pin	Internal IDC no	Cable Color	Function
1	B1	Tan / White	Ext 1 Switch
2	A1	Brown / White	Ext 2 Switch
3	B2	Pink / White	Ext 3 Switch
4	A2	Orange / White	Ext 4 Switch
5	B3	Yellow / White	Ext 5 Switch
6	A3	Green / White	M 1 Switch
7	B4	Blue / White	M 2 Switch
8	A4	Violet / White	M 3 Switch
9	B5	Grey / White	S 1 Switch
10	A5	Brown / Tan	S 2 Switch
11	**B6**	**Pink / Tan**	**CUT Switch**
12	A6	Orange / Tan	AUTOCUE Switch
13	B7	Yellow / Tan	TB 1 Switch
14	A7	Green / Tan	TB 2 Switch
15	B8	Blue / Tan	Volume Wiper
16	A8	Violet / Tan	Volume -Volt
17	B9	Grey / Tan	- 18 Volt supply
18	A9	Pink / Brown	- 24 Volt supply
19	B10	Orange / Brown	TB MIC + audio
20	A10	Yellow / Brown	**ALT 1 Switch**
21	B11	Green / Brown	Listen CUE 1 Switch
22	A11	Blue / Brown	Mono Switch
23	B12	Violet / Brown	REF Switch
24	A12	Grey / Brown	CUT Left Switch
25	B13	Orange / Pink	CUT Right Switch

50 way Pin	Internal IDC no	Cable Color	Function
26	D1	White / Tan	Ext 1 Tally
27	C1	White / Brown	Ext 2 Tally
28	D2	White / Pink	Ext 3 Tally
29	C2	White / Orange	Ext 4 Tally
30	D3	White / Yellow	Ext 5 Tally
31	C3	White / Green	M 1 Tally
32	D4	White / Blue	M 2 Tally
33	C4	White / Violet	M 3 Tally
34	D5	White / Grey	S 1 Tally
35	C5	Tan / Brown	S 2 Tally
36	**D6**	**Tan / Pink**	**CUT Tally**
37	C6	Tan / Orange	AUTOCUE Tally
38	D7	Tan / Yellow	TB 1 Tally
39	C7	Tan / Green	TB 2 Tally
40	**D8**	**Tan / Blue**	**VOLUME Ground**
41	**C8**	**Tan / Violet**	**AUDIO GROUND**
42	D9	Tan / Grey	+ 18 Volt supply
43	C9	Brown / Pink	+ 12 Volt supply
44	D10	Brown / Orange	TB MIC - audio
45	C10	Brown / Yellow	**ALT 2 Switch**
46	D11	Brown / Green	Listen CUE 2 Switch
47	C11	Brown / Blue	DIFF Switch
48	D12	Brown / Violet	DIM Switch
49	C12	Brown / Grey	CUT Left Tally
50	D13	Pink / Orange	CUT Right Tally

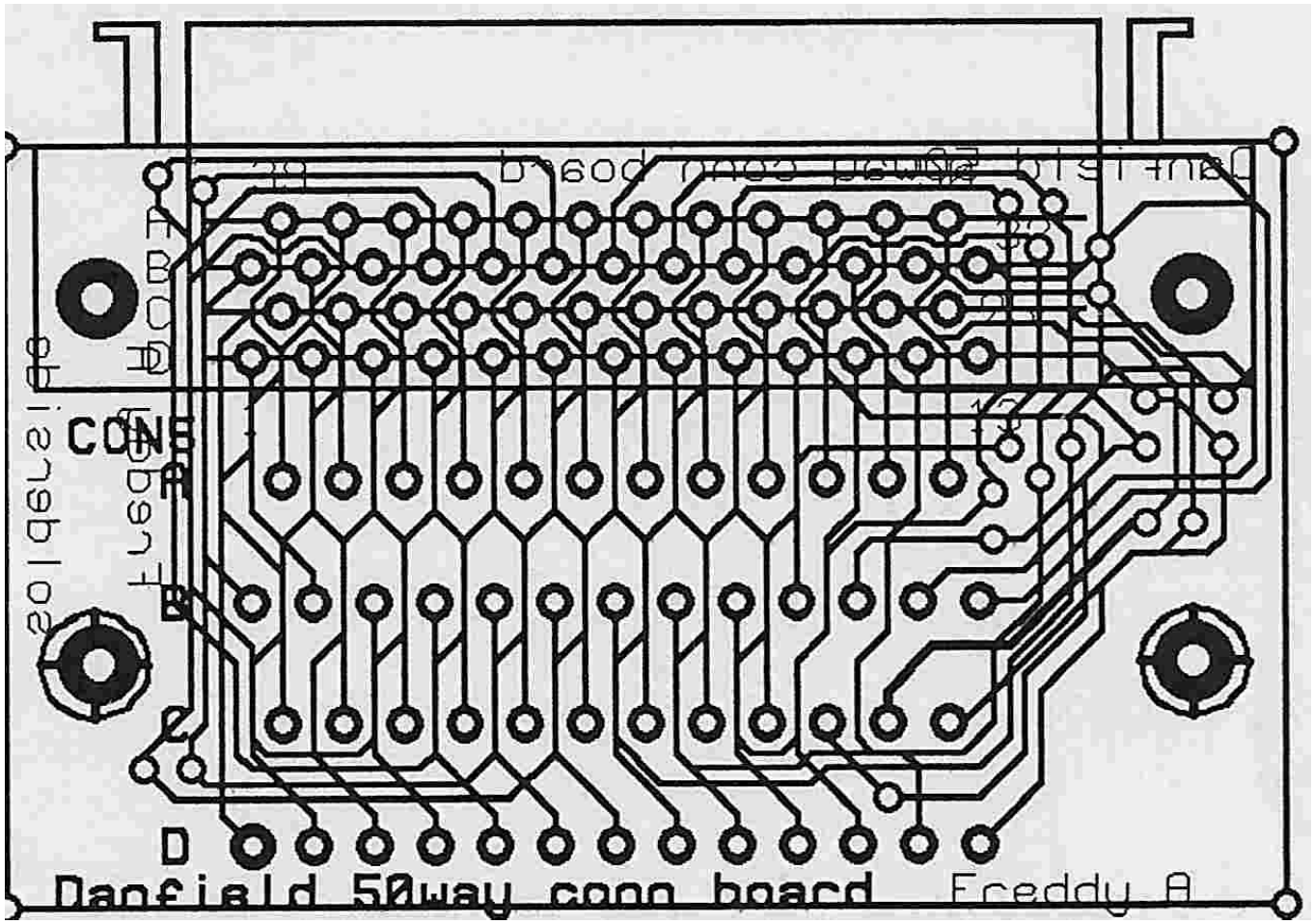

50 Way Remote Connector PCB Componentside

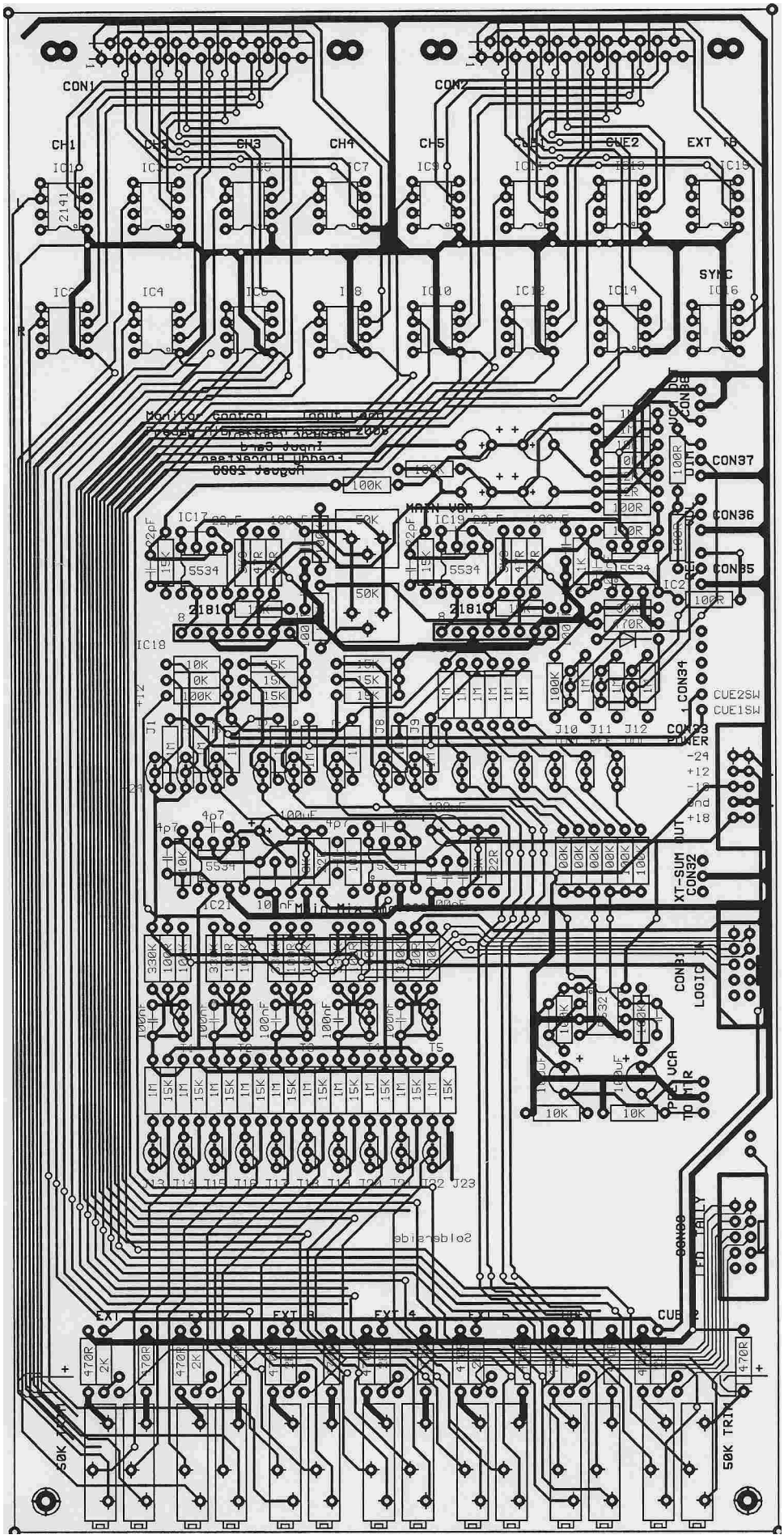

Page 27 *Analogue Input Card Componentside*

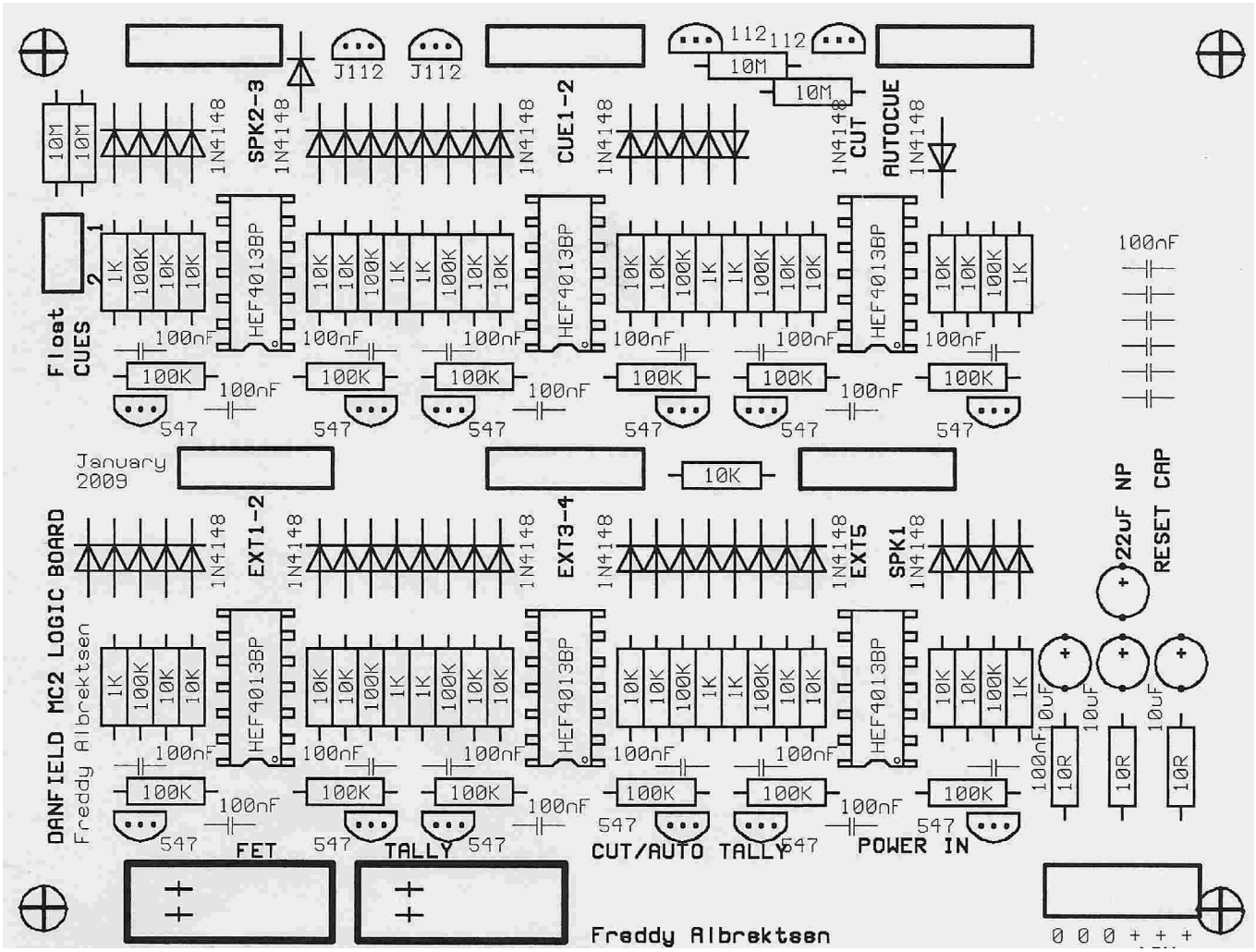

Logic Board Componentside

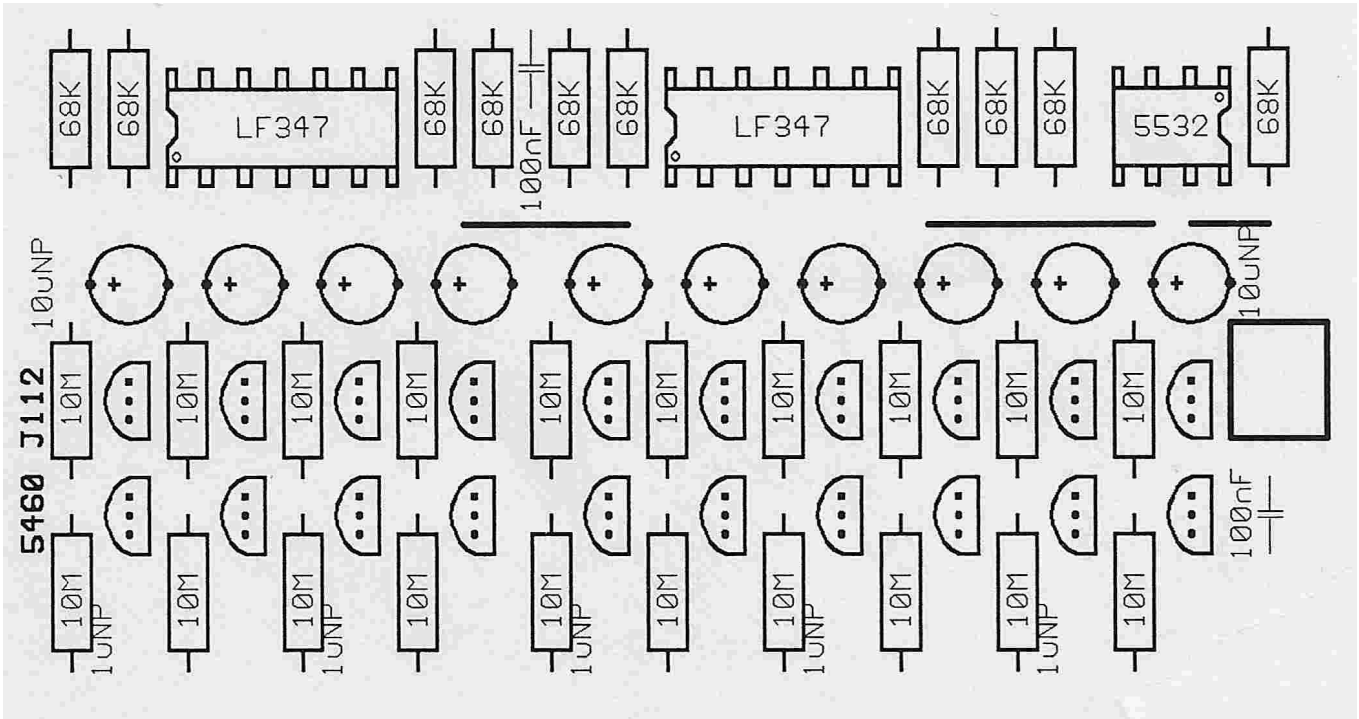

Output Buffer Card Componentside

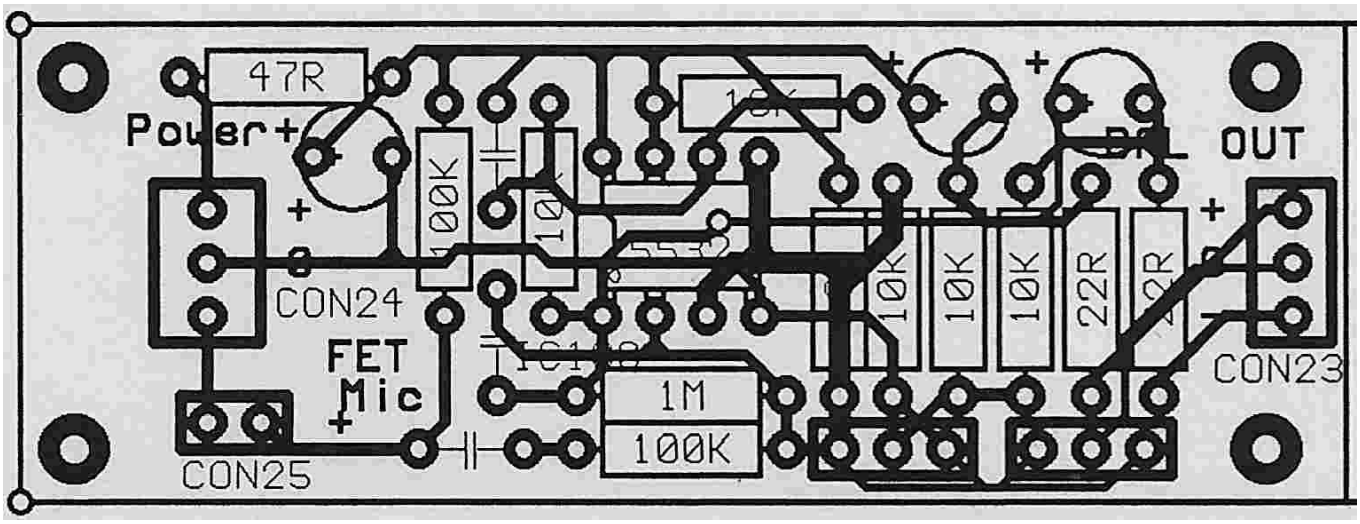

Talkback Amplifier (Located in Remote Unit)

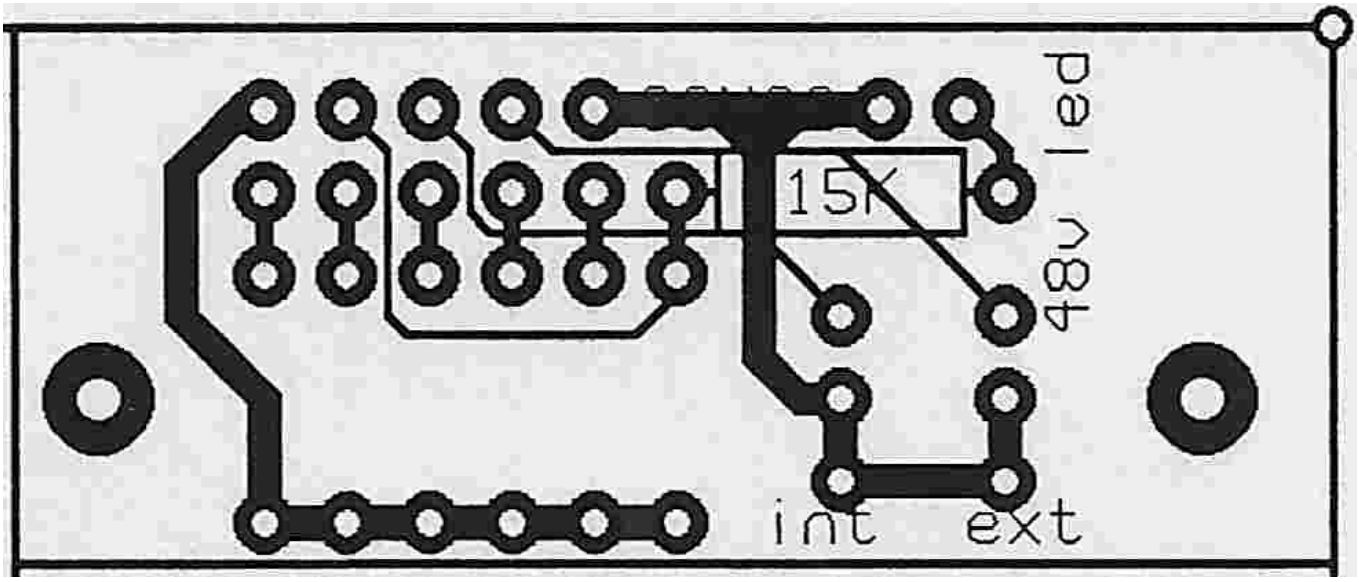

DIP Switch PCB Componentside

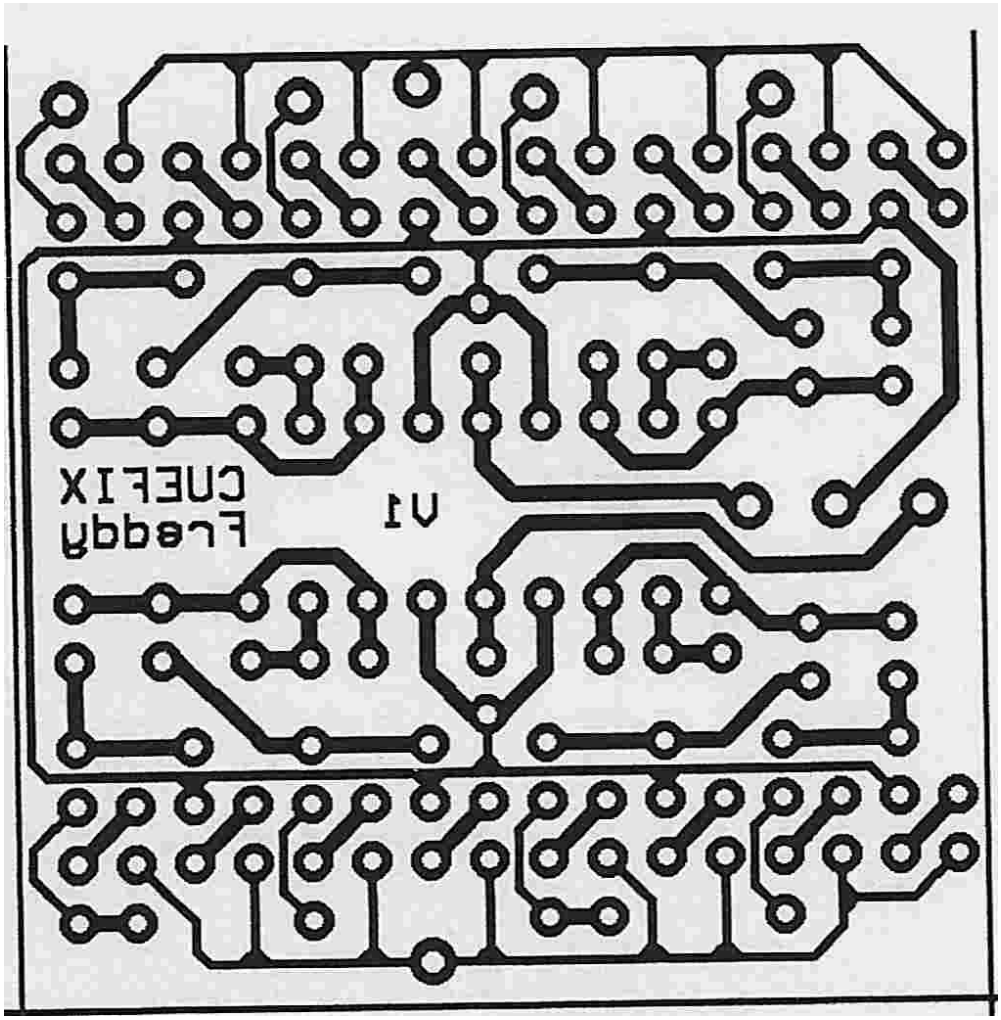

"CUT Fix" PCB Componentside

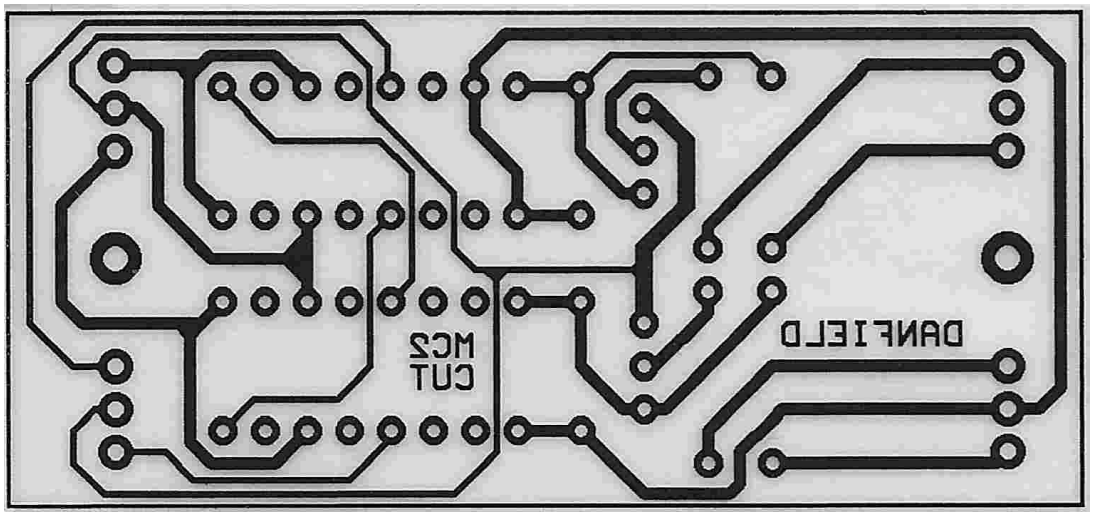

CUT – Left / Right Relay Board Componentside

Mc2 service note

19/12 -2009

Freddy A

Ext Mic :

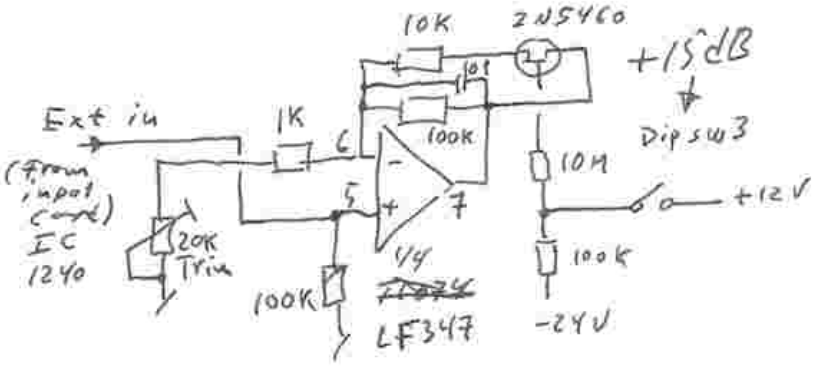

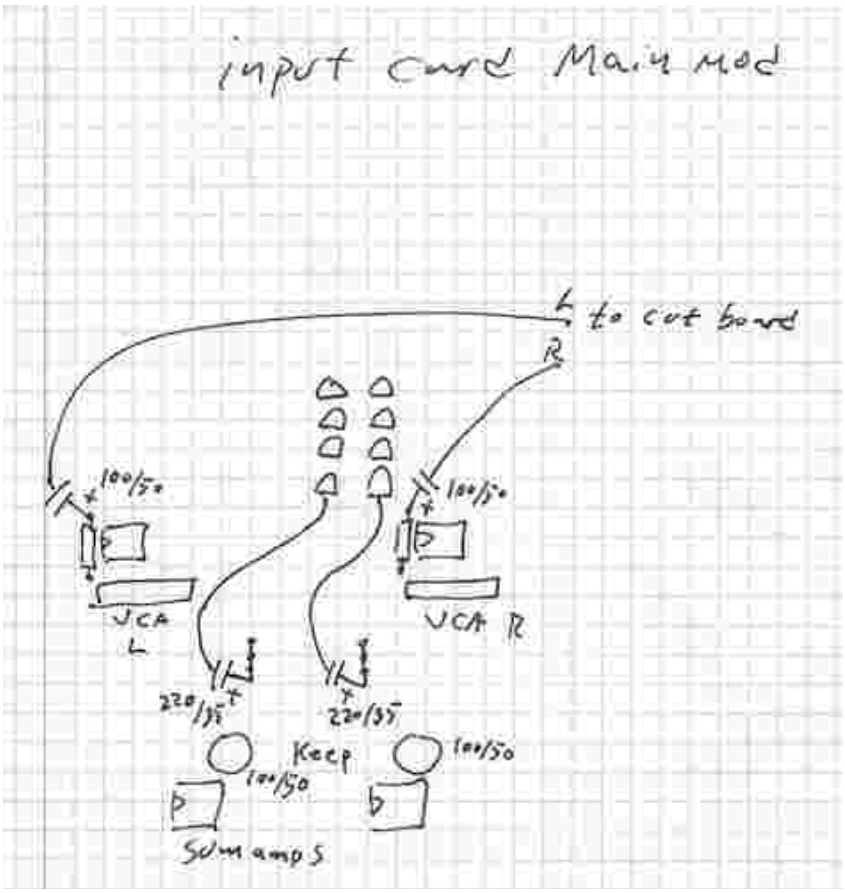
input card Main mod
L to cut board
R
100/50
100/50
VCA L
VCA R
220/35
220/35
Keep
100/50
100/50
Sum amps

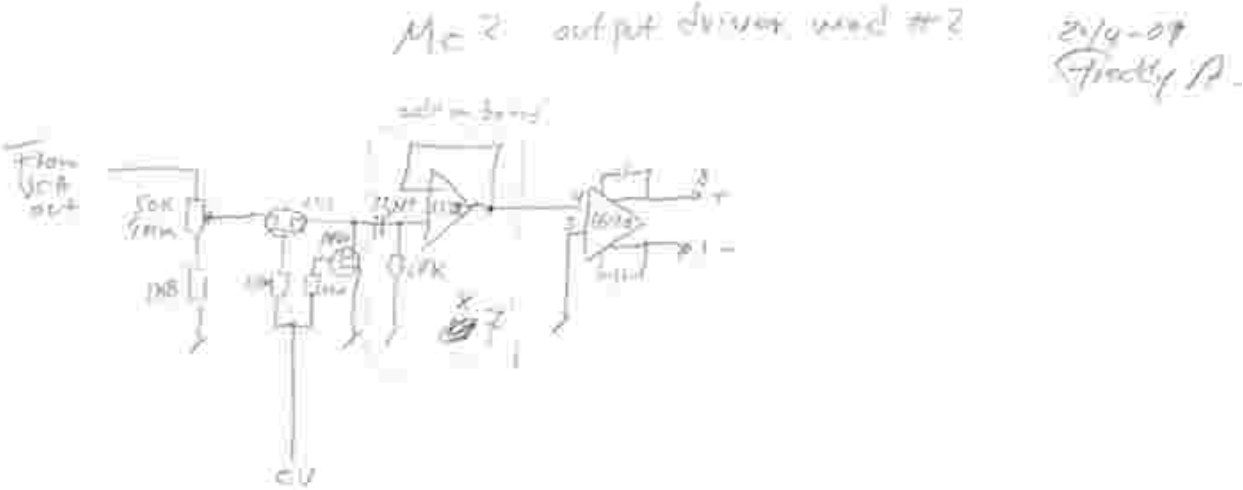
Mc2 output driver mod #2
2/4-09
Freddy A.
From VCA out
50K
1MB
CV

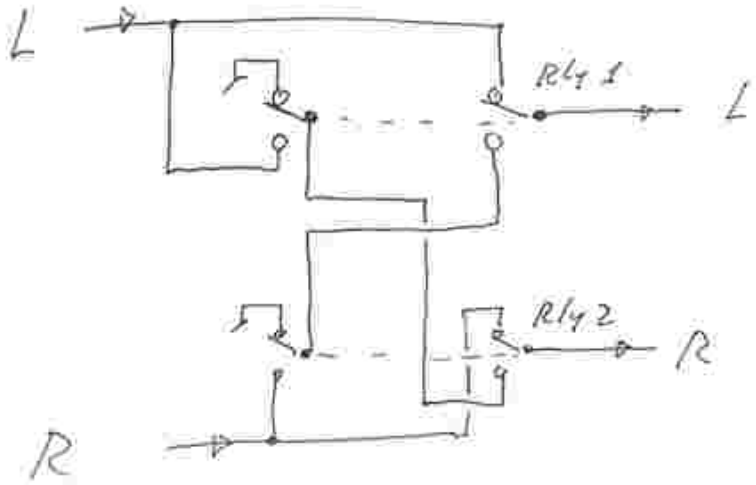
L
Rly 1
L
Rly 2
R
R

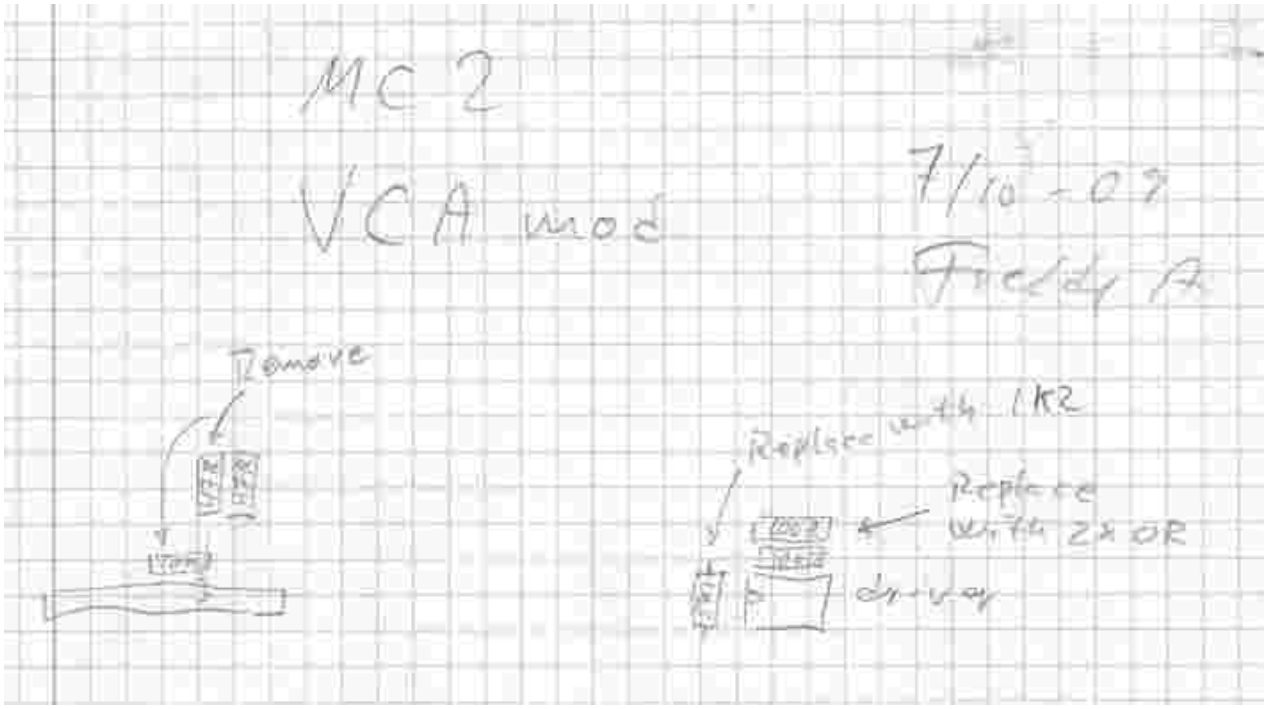
MC 2
VCA mod
7/10-07
Freddy A
Remove
Replace with 1KR
Replace
with 2x OR
driver

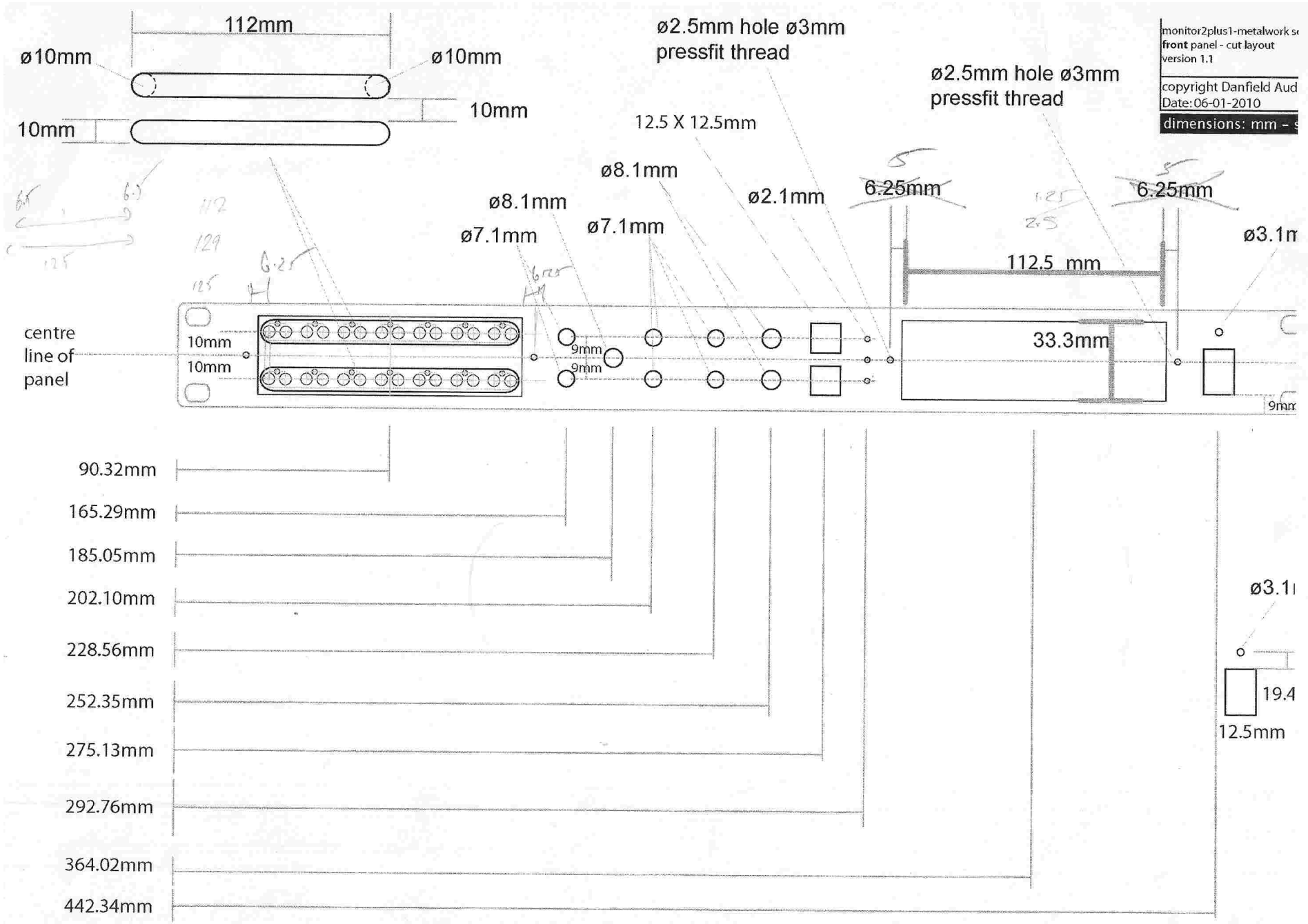
112mm
ø10mm
ø10mm
10mm
10mm
ø2.5mm hole ø3mm
pressfit thread
ø2.5mm hole ø3mm
pressfit thread
monitor2plus1-metalwork s
front panel - cut layout
version 1.1
copyright Danfield Aud
Date: 06-01-2010
dimensions: mm –
12.5 X 12.5mm
ø8.1mm
ø8.1mm
ø7.1mm
ø7.1mm
ø2.1mm
6.25mm
6.25mm
ø3.1m
112.5 mm
centre
line of
panel
10mm
10mm
9mm
9mm
33.3mm
9mm
90.32mm
165.29mm
185.05mm
202.10mm
228.56mm
252.35mm
275.13mm
292.76mm
364.02mm
442.34mm
ø3.1
19.4
12.5mm

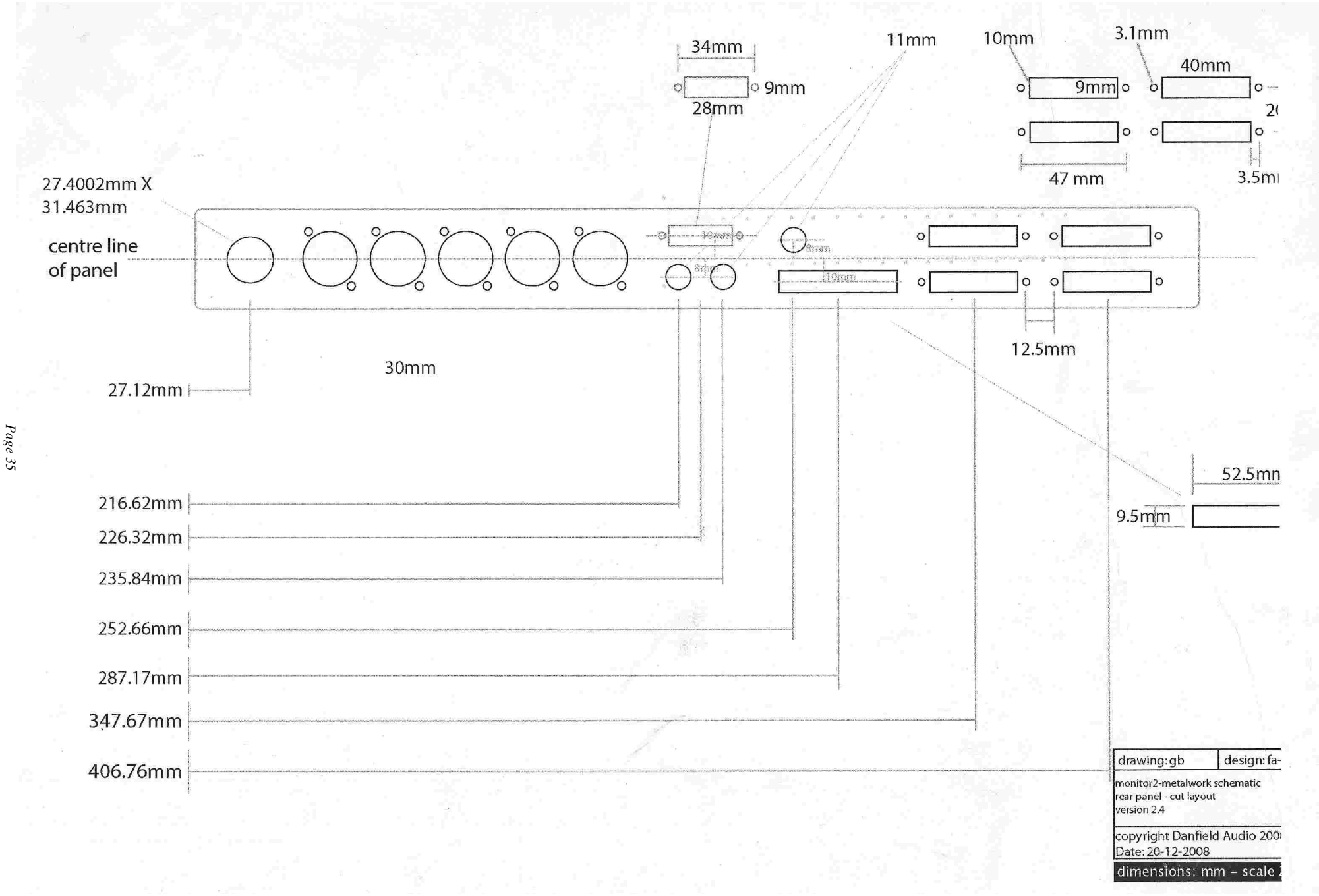
34mm
9mm
28mm
11mm
10mm
3.1mm
40mm
9mm
47 mm
3.5mm
27.4002mm X
31.463mm
centre line
of panel
30mm
27.12mm
12.5mm
52.5mm
9.5mm
216.62mm
226.32mm
235.84mm
252.66mm
287.17mm
347.67mm
406.76mm
drawing: gb
design: fa-
monitor2-metalwork schematic
rear panel - cut layout
version 2.4
copyright Danfield Audio 200
Date: 20-12-2008
dimensions: mm – scale